20/21 Series Gear Pump & Motor

◇Standardization, universalization, serialization design . Connecting dimensions are SAE standard, multiple assemblies are available.

◇Displacement range :16.1ml/r - 64.6 ml/r,

Max rated pressure : 207bar, Intermittent :245bar,

Speed range :600-2400 RPM .

PERFORMANCE

Bearing series pressure and displacement

CODE		05	07	10	12	15	17	20
Gear Width		1/2"	3/4"	1"	1-1/4"	1-1/2"	1-3/4"	2"
Displacement		0.98	1.48	1.97	2.47	2.95	3.45	3.94
		16.1	24.2	32.3	40.4	48.4	56.5	64.6
Max Pressure	30	2500	2500	2500	2500	2500	2250	2250
		172	172	172	172	172	155	155
	31	3000	3000	3000	3000	3000	2500	2500
		207	207	207	207	207	172	172
Speed RPM		600-2400						

Flow : GPM/LPM Pressure : PSI/bar

P20/21 Flow and Power data at 2500 PSI (172 bar)

Speed RPM	Gear Width Output (gpm/lpm) and Inches (HP/KW)									
	1"		1-1/4"		1-1/2"		1-3/4"		2"	
	Flow	Power	Flow	Power	Flow	Power	Flow	Power	Flow	Power
900	24.5	11	30	13	38	15	45.5	17	51	19
	6.5	14	8	17	10	20	12	23	13.5	25
1200	34	14	43.5	17	53	20	60.5	22	70	25
	9	19	11.5	22	14	26	16	30	18.5	33
1500	43.5	17	55	21	66	24	77.5	27	89	31
	11.5	23	14.5	28	17.5	33	20.5	37	23.5	42
1800	53	20	68	25	81.5	29	94.5	27	110	37
	14	27	18	33	21.5	39	25	44	29	50
2100	62.5	24	79.5	29	94.5	34	112	38	129	43
	16.5	32	21	38	25	45	29.5	51	34	58
2400	72	26	91	33	110	38	129	43	148	49
	19	36	24	44	29	51	34	58	39	66

Flow: GPM/LPM Power : HP/kW

M21 Motor performance data at 2500 PSI (172 bar).

Speed RPM	Torque: In.-lbs. / Nm Flow: GPM/LPM Power: HP/KW								
	1"			1-1/2"			2"		
	Output		Input	Output		Input	Output		Input
	Torque	Power	Flow	Torque	Power	Flow	Torque	Power	Flow
800	675	8.5	9	1035	13	13	1385	17.5	17
	76.5	6.5	34	117	9.5	49	156.5	13	64.5
1200	685	13	13	1055	20	18	1410	27	23.5
	77.5	9.5	49	119	15	68	159.5	20	89
1600	680	17.5	16	1030	26	23	1390	35	30.5
	77	13	60.5	116.5	19.5	87	157	26	115
2000	660	21	19.5	1010	32	28	1370	43.5	37
	74.5	15.5	74	114	24	106	155	32.5	140

Torque : In. -lbs./Nm Flow : GPM/LPM Power : HP/kW

Performance data shown are the average results based on a series of laboratory tests of production units and are not necessarily representative of any one unit. Tests were run with the oil reservoir temperature at 120 F and viscosity 150 SSU at 100 F, Requests for more specific data should be directed to our Product Support Department through our sales representatives.

Dimensional Date

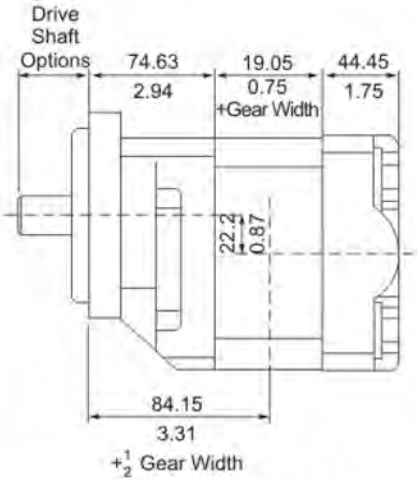

Single Unit

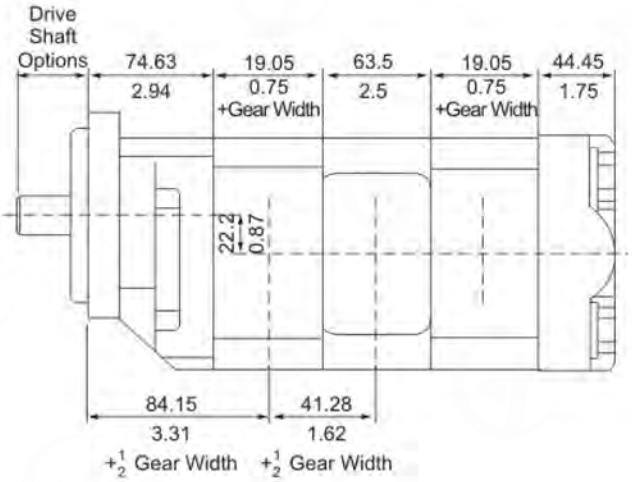

Multiple Unit

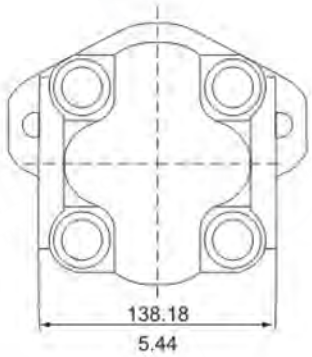

Single Unit

20/21 Series Coding

REPEAT FOR TANDEM UNITS

1 20/21 2 3 4 5 6 7 8 9 6 7 10

1 PUMP / MOTOR

P PUMP
M MOTOR

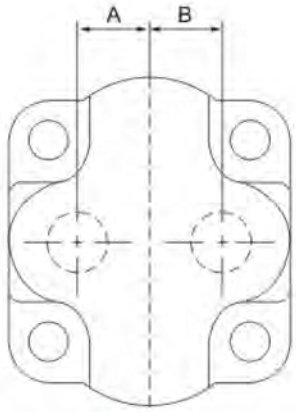

2 UNIT

A SINGLE UNIT
B TANDEM UNITS

3 SHAFT END COVER

1 PUMP WITHOUT SHAFT BEARING CLOCKWISE ROTATION
2 PUMP WITHOUT SHAFT BEARING COUNTER CLOCKWISE ROTATION
3 PUMP WITHOUT SHAFT BEARING DOUBLE ROTATION
4 PUMP WITH SHAFT BEARING CLOCKWISE ROTATION
5 PUMP WITH SHAFT BEARING COUNTER CLOCKWISE ROTATION
6 PUMP WITH SHAFT BEARING DOUBLE ROTATION
8 MOTOR WITH SHAFT BEARING 1/4" DRAIN PORT
9 MOTOR WITHOUT SHAFT BEARING & 1/4" DRAIN PORT

4 SHAFT END COVER

05 6 BOLT FLANGE 3.25" DIA. BOLT CIRCLE
10 2 BOLT PAD MOUNT
27 4 BOLT CLOVERLEAF
42 S.A.E. 4 BOLT "B" MOUNT
46 SAE 2/4 BOLT "B" MOUNT
94 S.A.E. 2 BOLT "A" MOUNT
96 S.A.E. 2 BOLT "B" MOUNT type 2
97 S.A.E. 2 BOLT "B" MOUNT

"O" Ring Ports

CODE				PORT SIZE			
SINGLE		TANDEM		LEFT	RIGHT	A	B
CE	CY	CI	CY	3/4"	NONE	N/A	1.25
DE	DY	DI	DY	NONE	3/4"	1.25	N/A
FE	FY	FI	FY	3/4"	3/4"	1.25	1.25
GE	GY	GI	GY	1"	3/4"	1.25	1.382
HE	HY	HI	HY	3/4"	1"	1.382	1.25
MA	YO	MU	YO	1"	NONE	N/A	1.382
RA	RO	SU	RO	NONE	1"	1.382	N/A
JE	JY	JI	JY	1"	1"	1.382	1.382

5 PORT END COVER CODES

NPT PORT

CODE				PORT SIZE			
SINGLE		TANDEM		LEFT	RIGHT	A	B
BE	BY	BI	BY	NONE	NONE	N/A	N/A
KE	KY	KI	KY	3/4"	NONE	N/A	1.25
LE	LY	LI	LY	NONE	3/4"	1.25	N/A
ME	MY	MI	MY	3/4"	3/4"	1.25	1.25
QU	QQ	QD	QQ	1"	1"	1.382	1.382
AI		AI		3/4"	3/4"	1.382	1.25
EI		EI		3/4"	1"	1.25	1.382

WITH SUPPORT STUDS
WITHOUT SUPPORT STUDS

6 Gear Housing

◇N.P.T. PORTING IS NOT RECOMMENDED FOR PRESSURES ABOVE 1500 P.S.I.
◇PORTS MARKED WITH A "O" ARE RECOMMENDED PORTING, FOR ALL OTHER PORTING PLEASE CONSULT THE FACTORY
◇SHADED CELLS ARE GOOD FOR MOTOR UNITS
◇ORIENTATION IS VIEWED FROM THE SHAFT END

NPT PORT

NPT.CODE	PORT LEFT	PORT RIGHT	05	07	10	12	15	17	20
AB	NONE	NONE	√	√	√	√	√	√	√
IL	1/2"	NONE	√	√	√				
IM	NONE	1/2"	√	√	√				
IR	1/2"	1/2"	√	√					
IC	3/4"	NONE		√	√	√	√	√	√
ID	NONE	3/4"		√	√	√	√	√	√
IF	3/4"	3/4"		√	√	√	√	√	√
IG	3/4"	1"			√	√	√	√	√
IH	3/4"	1 1/4"					√	√	
IJ	1"	3/4"			√	√	√	√	√
IK	1 1/4"	3/4"					√	√	
YC	1"	NONE			√	√	√	√	√
YD	NONE	1"			√	√	√	√	√
YF	1"	1"			√	√	√	√	√
YG	1"	1 1/4" *				√	√	√	√
YH	1"	1 1/2"					√		
YJ	1 1/4" *	1"					√	√	√
YK	1 1/2"	1"							
IA	1 1/4" *	NONE					√	√	√
IB	NONE	1 1/4" *					√	√	√
YL	1 1/4"	1 1/4"					√	√	√

BSPP PORT

BSPP.CODE	PORT LEFT	PORT RIGHT	05	07	10	12	15	17	20
AB	NONE	NONE	√	√	√	√	√	√	√
YN	3/4"	NONE		√	√	√	√	√	√
YQ	NONE	3/4"		√	√	√	√	√	√
YS	3/4"	3/4"			√	√		√	√
YT	3/4"	1"			√	√			
YU	3/4"	1 1/4"						√	√
YV	1"	3/4"			√	√	√	√	
YW	1 1/4"	3/4"						√	√
SL	1"	NONE				√	√	√	√
RQ	NONE	1"				√	√	√	√
MP	1"	1"				√	√	√	
VY	1"	1 1/4" *					√	√	√
IO	1 1/4" *	1"					√	√	√
NJ	1 1/4" *	NONE						√	√
UI	NONE	1 1/4" *						√	√
PF	1 1/4"	1 1/4"							√

O.D TUBE.

O.D TUBE.	PORT LEFT	PORT RIGHT	05	07	10	12	15	17	20
AB	NONE	NONE	√	√	√	√	√	√	√
EC	3/4"	NONE			√	√	√	√	√
ED	NONE	3/4"		√	√	√	√	√	√
EF	3/4"	3/4"		√	√	√	√	√	√
EG	3/4"	1"			√	√	√	√	√
EH	3/4"	1 1/4"				√	√	√	√
IN	3/4"	1 1/2"						√	√
EJ	1"	3/4"			√	√	√	√	√
EK	1 1/4"	3/4"				√	√	√	√
IP	1 1/2"	3/4"						√	√
EZ	7/8"	NONE				√			
EL	7/8"	1"			√	√			
EM	1"	7/8"			√				
AC	1"	NONE			√	√	√	√	√
AD	NONE	1"			√	√	√	√	√
AF	1"	1"					√	√	√
AG	1"	1 1/4" *					√	√	√
AH	1"	1 1/2" *						√	√
AJ	1 1/4" *	1"					√	√	√
AK	1 1/2" *	1"						√	√
AA	1 1/4" *	NONE				√	√	√	√
AO	NONE	1 1/4" *				√	√	√	√
AL	1 1/4"	1 1/4"					√	√	√
AM	1 1/4"	1 1/2" *						√	√
AP	1 1/2" *	1 1/4"						√	√
AE	1 1/2" *	NONE						√	√
AU	NONE	1 1/2" *						√	√

SPLIT FLANGE

SPLIT FLANGE	PORT LEFT	PORT RIGHT	05	07	10	12	15	17	20
AB	NONE	NONE	√	√	√	√	√	√	√
UC	3/4"	NONE		√	√	√	√	√	√
UD	NONE	3/4"		√	√	√	√	√	√
UF	3/4"	3/4"		√	√	√	√	√	
UG	3/4"	1"			√	√	√	√	
UH	3/4"	1 1/4"				√	√	√	√
UJ	1"	3/4"			√	√	√	√	√
UK	1 1/4"	3/4"				√	√	√	√
OC	1"	NONE				√	√	√	√
OD	NONE	1"				√	√	√	√
OF	1"	1"			√	√	√	√	√
OG	1"	1 1/4" *				√	√	√	√
OH	1"	1 1/2" *						√	√
OJ	1 1/4"*	1"				√	√	√	√
OK	1 1/2"*	1"						√	√
OA	1 1/4" *	NONE				√	√	√	√
OB	NONE	1 1/4" *				√	√	√	√
OL	1 1/4"	1 1/4"					√	√	√
OM	1 1/4"	1 1/2" *						√	√
OP	1 1/2" *	1 1/4"						√	√
OE	1 1/2" *	NONE						√	√
OU	NONE	1 1/2"						√	√

METRIC S. F.

METRIC S. F.	PORT LEFT	PORT RIGHT	05	07	10	12	15	17	20
AB	NONE	NONE	√	√	√	√	√	√	√
VN	3/4"	NONE			√	√	√	√	
VQ	NONE	3/4"			√	√	√	√	
VS	3/4"	3/4"			√	√	√	√	
VT	3/4"	1"			√	√	√	√	
RV	1"	3/4"			√	√	√	√	
RU	3/4"	1 1/4"				√	√	√	
RW	1 1/4"	3/4"				√	√	√	
UL	1"	NONE			√	√	√	√	√
UR	NONE	1"			√	√	√	√	√
UM	1"	1"				√	√	√	
VU	1"	1 1/4" *				√	√	√	√
UX	1 1/4" *	1"				√	√	√	√
HO	1"	1 1/2" *						√	√
VO	1 1/2" *	1"						√	√
NO	1 1/4" *	NONE					√	√	√
UO	NONE	1 1/4" *					√	√	√
PO	1 1/4"	1 1/4"					√	√	√
QO	1 1/4"	1 1/2" *						√	√
SO	1 1/2" *	1 1/4"						√	√
UY	1 1/2" *	NONE					√	√	
TO	NONE	1 1/2"					√	√	

METRIC STR. THD.

METRIC STR. THD.	PORT LEFT	PORT RIGHT	05	07	10	12	15	17	20
AB	NONE	NONE	√	√	√	√	√	√	√
EN	3/4"	NONE			√	√	√		
TQ	NONE	3/4"			√	√	√		
ES	3/4"	3/4"			√	√			
ET	3/4"	1"			√	√			
EV	1"	3/4"			√	√	√	√	
NL	1"	NONE			√	√	√		
ER	NONE	1"			√	√	√	√	√
CM	1"	1"				√	√		
VE	1"	1 1/4" *					√	√	√
EX	1 1/4" *	1"					√	√	√
PA	1 1/4"	1 1/4"						√	√
QA	1 1/4"	1 1/2" *							√
SA	1 1/2" *	1 1/4"							√

7 GEAR SIZE

CODE	Gear Size	Displacement		Housing Width		Max Pressure	
		in.³/rev.	cm³/rev.	inch	mm	20 Series	21 Series
05	1/2"	0.99	16.1	1.25	31.75	2500 psi (172 bar)	3000 psi (207 bar)
07	3/4"	1. 48	24.2	1.5	38.1	2500 psi (172 bar)	3000 psi (207 bar)
10	1"	1.97	32.3	1.75	44.45	2500 psi (172 bar)	3000 psi (207 bar)
12	1 1/4"	2.46	40.4	2	50.8	2500 psi (172 bar)	3000 psi (207 bar)
15	1 1/2"	2.96	48.4	2.25	57.15	2500 psi (172 bar)	3000 psi (207 bar)
17	1 3/4"	3.45	56.5	2.5	63.5	2250 psi (155 bar)	2500 psi (172 bar)
20	2"	3.94	64.6	2.75	69.85	2250 psi (155 bar)	2500 psi (172 bar)

8 SHAFT TYPE

CODE

- 07 S.A.E. "C" 14 TOOTH SPLINE 1.250" dia - CONTINENTAL ONLY
- 12 KEYED SHAFT ,75" dia. X 1.56 KEY CONTINENTAL ONLY
- 15 S.A.E. B KEYED .875" dia. WITH 5/8" -18 THREAD - CONTINENTAL ONLY
- 25 S.A.E. "B" 13 TOOTH SPLINE .88" dia
- 30 S.A.E. "B" KEYED .88" dia 1/4" X 3/8" X1" KEY
- 32 CLUTCH PUMP SHAFT
- 43 S.A.E. B B KEYED 1" dia. 1/4" X 3/8" X 1 1/4" KEY
- 65 S.A.E. "B" 13 TOOTH SPLINE .875" dia TYPE 2
- 66 S.A.E. "B" KEYED .88" dia 1/4" X3/8" X1" KEY TYPE 2
- 67 S.A.E. B B KEYED 1" dia. 1/4" X3/8"X 1 1/4" KEY TYPE 2
- 68 6 TOOTH SPLINE 1" dia.
- 90 S.A.E. "B" THREADED + KET ANSI 22-2 MODIFED
- 95 S.A.E. A 9 TOOTH SPLINE .62" dia.
- 98 S.A.E. B B 15 TOOTH SPLINE 1" dia.

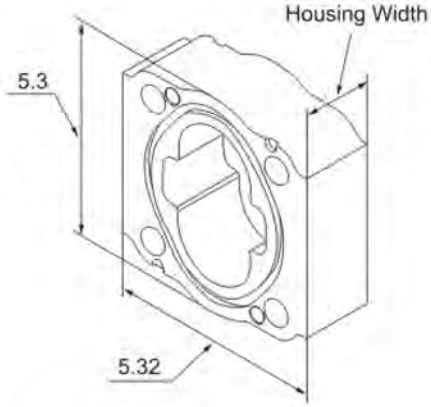

9 BEARING CARRIERS ORIENTATION IS FROM THE SHAFT END

NPT PORT		CODE	
IN	OUT	CW	CCW
NONE	NONE	C	D
NONE	NONE	A	J
1"	NONE	TB	VB
1 1/4"	NONE	BT	BV
1"	3/4"	TX	XT
1 1/4"	3/4"	VX	XV
1 1/4"	1"	VZ	ZV
1"	3/4"	TJ	JT
1 1/4"	3/4"	VJ	JV
1 1/4"	1"	VK	KV
1 1/2"	1"	KW	WK
1"	3/4"	ZX	XZ
1"	3/4"	ZS	SZ

S.A.E. ORING		CODE	
1"	NONE	CB	BC
1 1/4"	NONE	DB	BD
1 1/2"	NONE	FB	BF
NONE	3/4"	PJ	JP
1"	3/4"	CJ	JC
1 1/4"	3/4"	DJ	JD
1 1/2"	3/4"	FJ	JF
1 1/4"	1"	DK	KD
1 1/2"	1"	FK	KF
1"	3/4"	KJ	JK
1"	3/4"	KX	XK

S.A.E. SPLIT FLANGE		CODE	
IN	OUT	CW	CCW
1"	NONE	LB	BL
1 1/4"	NONE	MB	BM
1 1/2"	NONE	NB	BN
NONE	3/4"	BR	RB
1"	3/4"	LR	RL
1 1/4"	3/4"	MR	RM
1 1/2"	3/4"	NR	RN
1 1/4"	1"	MS	SM
1 1/2"	1"	NS	SN
1"	3/4"	LX	XL
1 1/4"	3/4"	MX	XM
1 1/2"	3/4"	NX	XN
1 1/4"	1"	MZ	ZM
1 1/2"	1"	NZ	ZN
1"	3/4"	SR	RS
1"	3/4"	RZ	ZR

MOTORS ONLY		CODE	
IN	OUT	DUAL	
NONE	NONE	B	
1"	1"	TT	NPT
1 1/4"	1 1/4"	VV	NPT
1"	1"	CC	SAE O RING
1 1/4"	1 1/4"	BB	SAE O RING
1 1/2"	1 1/2"	FF	SAE O RING
1"	1"	LL	SAE SPLIT FLANGE
1 1/4"	1 1/4"	MM	SAE SPLIT FLANGE
1 1/2"	1 1/2"	NN	SAE SPLIT FLANGE

10 CONNECTING SHAFT USE CODE #1 FOR ALL MULTIPLE UNITS

30/31 Series Gear Pump & Motor

◇Standardization, universalization, serialization design . Connecting dimensions are SAE standard, multiple assemblies are available.

◇Displacement range :16.4ml/r -80.7 ml/r,

Max rated pressure : 207bar, Intermittent :245bar,

Speed range :600-2400 RPM .

PERFORMANCE

Bearing series pressure and displacement

CODE		05	07	10	12	15	17	20	22	25
Gear Width		1/2"	3/4"	1"	1-1/4"	1-1/2"	1-3/4"	2"	2-1/4"	2-1/2"
Displacement		0.98	1.48	1.97	2.47	2.95	3.45	3.94	4.43	4.92
		16.1	24.2	32.3	40.4	48.4	56.5	64.6	72.6	80.7
Max Pressure	30	2500	2500	2500	2500	2500	2250	2250	2000	1800
		172	172	172	172	172	155	155	145	125
	31	3000	3000	3000	3000	3000	2500	2500	2250	2000
		207	207	207	207	207	172	172	155	135
Speed RPM		600-2400								

Flow : GPM/LPM Pressure : PSI/bar

P30/31 Flow and Power data at 2500 PSI (172 bar)

Speed RPM	Gear Width Output (gpm/lpm) and Inches (HP/KW)									
	1"		1-1/4"		1-1/2"		1-3/4"		2"	
	Flow	Power	Flow	Power	Flow	Power	Flow	Power	Flow	Power
900	24.5	11	30	13	38	15	45.5	17	51	19
	6.5	14	8	17	10	20	12	23	13.5	25
1200	34	14	43.5	17	53	20	60.5	22	70	25
	9	19	11.5	22	14	26	16	30	18.5	33
1500	43.5	17	55	21	66	24	77.5	27	89	31
	11.5	23	14.5	28	17.5	33	20.5	37	23.5	42
1800	53	20	68	25	81.5	29	94.5	27	110	37
	14	27	18	33	21.5	39	25	44	29	50
2100	62.5	24	79.5	29	94.5	34	112	38	129	43
	16.5	32	21	38	25	45	29.5	51	34	58
2400	72	26	91	33	110	38	129	43	148	49
	19	36	24	44	29	51	34	58	39	66

Flow: GPM/LPM Power : HP/kW

M31 Motor performance data at 2500 PSI (172 bar).

Speed RPM	Torque: In.-lbs. / Nm Flow: GPM/LPM Power: HP/KW								
	1"			1-1/2"			2"		
	Output		Input	Output		Input	Output		Input
	Torque	Power	Flow	Torque	Power	Flow	Torque	Power	Flow
800	675	8.5	9	1035	13	13	1385	17.5	17
	76.5	6.5	34	117	9.5	49	156.5	13	64.5
1200	685	13	13	1055	20	18	1410	27	23.5
	77.5	9.5	49	119	15	68	159.5	20	89
1600	680	17.5	16	1030	26	23	1390	35	30.5
	77	13	60.5	116.5	19.5	87	157	26	115
2000	660	21	19.5	1010	32	28	1370	43.5	37
	74.5	15.5	74	114	24	106	155	32.5	140

Torque : In. -lbs./Nm Flow : GPM/LPM Power : HP/kW

Performance data shown are the average results based on a series of laboratory tests of production units and are not necessarily representative of any one unit. Tests were run with the oil reservoir temperature at 120 F and viscosity 150 SSU at 100 F, Requests for more specific data should be directed to our Product Support Department through our sales representatives.

Dimensional Date

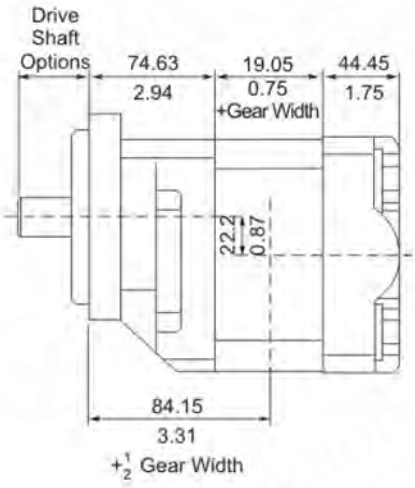

Single Unit

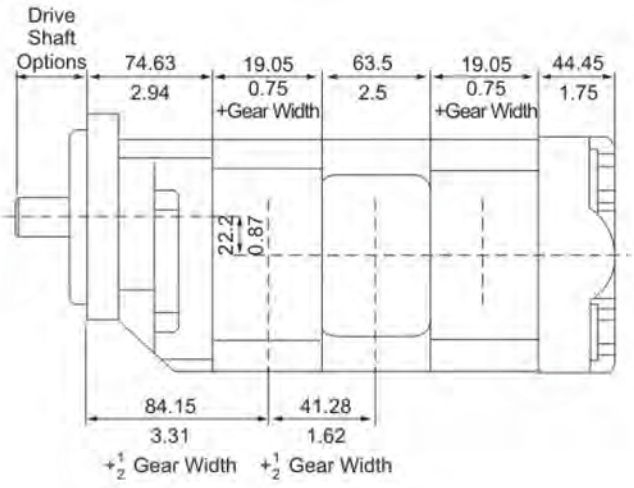

Multiple Unit

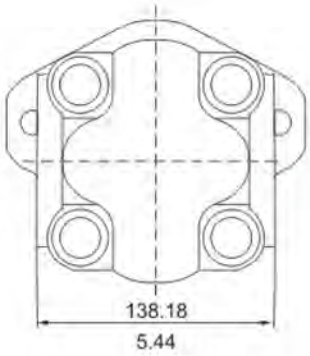

Single Unit

30/31 Series Coding

REPEAT FOR TANDEM UNITS

1 30/31 2 3 4 5 6 7 8 9 6 7 10

1 PUMP / MOTOR

P PUMP
M MOTOR

2 UNIT

A SINGLE UNIT
B TANDEM UNITS
C SINGLE OR TANDEM WITH A CONTINENTAL SHAFT

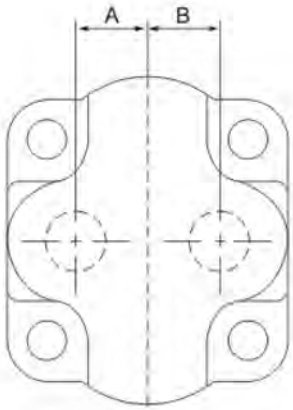

3 SHAFT END COVER

1 PUMP WITHOUT SHAFT BEARING CLOCKWISE ROTATION
2 PUMP WITHOUT SHAFT BEARING COUNTER CLOCKWISE ROTATION
3 PUMP WITHOUT SHAFT BEARING DOUBLE ROTATION
4 PUMP WITH SHAFT BEARING CLOCKWISE ROTATION
5 PUMP WITH SHAFT BEARING COUNTER CLOCKWISE ROTATION
6 PUMP WITH SHAFT BEARING DOUBLE ROTATION
8 MOTOR WITH SHAFT BEARING 1/4" DRAIN PORT
9 MOTOR WITHOUT SHAFT BEARING & 1/4" DRAIN PORT

4 SHAFT END COVER

00 PAD MOUNT
05 6 BOLT FLANGE 3.25" DIA. BOLT CIRCLE
42 S.A.E. 4 BOLT "B" MOUNT
78 S.A.E. 4 BOLT "C" MOUNT
91 31/51 PIGGY BACK MOUNT
92 76/31 PIGGY BACK MOUNT
94 S.A.E. 2 BOLT "A" MOUNT
96 S.A.E. 2 BOLT "B" MOUNT type 2
97 S.A.E. 2 BOLT "B" MOUNT

5 PORT END COVER CODES

"O" Ring Ports

CODE			PORT SIZE			
SINGLE	TANDEM		LEFT	RIGHT	A	B
GU	GU		1 1/4"	1"	1.38	1.38
HU	HU		1"	1 1/4"	1.38	1.38
TU	TU	SIDE	1 1/4"	1"	N/A	N/A
XU	XU	SIDE	1"	1 1/4"	N/A	N/A

CODE				PORT SIZE			
SINGLE		TANDEM		LEFT	RIGHT	A	B
CE	CY	CI	CY	3/4"	NONE	N/A	1.25
CA	CO	CU	CO	3/4"	NONE	N/A	1.382
DE	DY	DI	DY	NONE	3/4"	1.25	N/A
DA	DO	DU	DO	NONE	3/4"	1.25	N/A
FE	FY	FI	FY	3/4"	3/4"	1.25	1.25
JA	BO	JU	BO	3/4"	3/4"	1.382	1.382
GE	GY	GI	GY	1"	3/4"	1.25	1.382
KA		KU		1"	3/4"	1.382	1.382
HE	HY	HI	HY	3/4"	1"	1.382	1.25
LA		LU		3/4"	1"	1.382	1.382
MA	YO	MU	YO	1"	NONE	N/A	1.382
RA	RO	SU	RO	NONE	1"	1.382	N/A
JE	JY	JI	JY	1"	1"	1.382	1.382
ZA	ZO	ZU	ZO	1"	1"	1.382	1.382

NPT PORT

CODE				PORT SIZE			
SINGLE		TANDEM		LEFT	RIGHT	A	B
BE	BY	BI	BY	NONE	NONE	N/A	N/A
KE	KY	KI	KY	3/4"	NONE	N/A	1.25
LE	LY	LI	LY	NONE	3/4"	1.25	N/A
ME	MY	MI	MY	3/4"	3/4"	1.25	1.25

WITH SUPPORT STUDS
WITHOUT SUPPORT STUDS

6 Gear Housing

◇N.P.T. PORTING IS NOT RECOMMENDED FOR PRESSURES ABOVE 1500 P.S.I.
◇PORTS MARKED WITH A "O" ARE RECOMMENDED PORTING, FOR ALL OTHER PORTING PLEASE CONSULT THE FACTORY
◇SHADED CELLS ARE GOOD FOR MOTOR UNITS
◇ORIENTATION IS VIEWED FROM THE SHAFT END

NPT PORT

NPT.CODE	PORT LEFT	PORT RIGHT	05	07	10	12	15	17	20
AB	NONE	NONE	√	√	√	√	√	√	√
IL	1/2"	NONE	√	√					
IM	NONE	1/2"	√	√					
IR	1/2"	1/2"	√	√					
IC	3/4"	NONE			√	√	√	√	√
ID	NONE	3/4"			√	√	√	√	√
IF	3/4"	3/4"			√	√	√	√	√
IG	3/4"	1"			√	√	√	√	
IH	3/4"	1 1/4"					√	√	
IJ	1"	3/4"			√	√	√	√	
IK	1 1/4"	3/4"					√	√	
YC	1"	NONE			√	√	√	√	
YD	NONE	1"			√	√	√	√	
YF	1"	1"				√	√	√	
YG	1"	1 1/4" *					√	√	√
YH	1"	1 1/2"					√	√	√
YJ	1 1/4" *	1"					√	√	√
YK	1 1/2"	1"					√	√	√
IA	1 1/4" *	NONE					√	√	√
IB	NONE	1 1/4" *					√	√	√
YL	1 1/4"	1 1/4"						√	√
YM	1 1/4"	1 1/2" *							√
YP	1 1/2"	1 1/4"							√
YA	1 1/2" *	NONE							√
YB	NONE	1 1/2" *							√

BSPP PORT

BSPP.CODE	PORT LEFT	PORT RIGHT	05	07	10	12	15	17	20
AB	NONE	NONE	√	√	√	√	√	√	√
YN	3/4"	NONE		√	√	√	√	√	√
YQ	NONE	3/4"		√	√	√	√	√	√
YS	3/4"	3/4"			√	√		√	√
YT	3/4"	1"			√	√			
YU	3/4"	1 1/4"						√	√
YV	1"	3/4"			√	√	√	√	
YW	1 1/4"	3/4"						√	√
SL	1"	NONE				√	√	√	√
RQ	NONE	1"				√	√	√	√
MP	1"	1"				√	√	√	
VY	1"	1 1/4" *					√	√	√
IO	1 1/4" *	1"					√	√	√
NJ	1 1/4" *	NONE						√	√
UI	NONE	1 1/4" *						√	√
PF	1 1/4"	1 1/4"							√

O.D TUBE.

O.D TUBE.	PORT LEFT	PORT RIGHT	05	07	10	12	15	17	20
AB	NONE	NONE	√	√	√	√	√	√	√
EC	3/4"	NONE			√	√	√	√	
ED	NONE	3/4"			√	√	√	√	
EF	3/4"	3/4"			√	√	√	√	√
EG	3/4"	1"			√	√	√	√	√
EH	3/4"	1 1/4"					√	√	
IN	3/4"	1 1/2"							√
EJ	1"	3/4"			√	√	√	√	√
EK	1 1/4"	3/4"					√	√	
IP	1 1/2"	3/4"							√
EZ	7/8"	NONE				√			
EL	7/8"	1"			√	√			
EM	1"	7/8"			√	√			
AC	1"	NONE			√	√	√	√	√
AD	NONE	1"			√	√	√	√	√
AF	1"	1"					√	√	√
AG	1"	1 1/4" *					√	√	√
AH	1"	1 1/2" *						√	√
AJ	1 1/4" *	1"					√	√	√
AK	1 1/2" *	1"						√	√
AA	1 1/4" *	NONE				√	√	√	
AO	NONE	1 1/4" *				√	√	√	
AL	1 1/4"	1 1/4"						√	√
AM	1 1/4"	1 1/2" *						√	√
AP	1 1/2" *	1 1/4"						√	√
AE	1 1/2" *	NONE						√	√
AU	NONE	1 1/2" *						√	√

SPLIT FLANGE

SPLIT FLANGE	PORT LEFT	PORT RIGHT	05	07	10	12	15	17	20
AB	NONE	NONE	√	√	√	√	√	√	√
UC	3/4"	NONE			√	√	√	√	
UD	NONE	3/4"			√	√	√	√	
UF	3/4"	3/4"		√	√	√	√		
UG	3/4"	1"		√	√	√	√		
UH	3/4"	1 1/4"				√	√	√	√
UJ	1"	3/4"			√	√	√	√	√
UK	1 1/4"	3/4"				√	√	√	√
OC	1"	NONE				√	√	√	
OD	NONE	1"				√	√	√	√
OF	1"	1"			√	√	√	√	√
OG	1"	1 1/4" *				√	√	√	√
OH	1"	1 1/2" *						√	√
OJ	1 1/4"*	1"				√	√	√	√
OK	1 1/2"*	1"						√	√
OA	1 1/4" *	NONE				√	√	√	√
OB	NONE	1 1/4" *				√	√	√	√
OL	1 1/4"	1 1/4"					√	√	√
OM	1 1/4"	1 1/2" *						√	√
OP	1 1/2" *	1 1/4"						√	√
OE	1 1/2" *	NONE						√	√
OU	NONE	1 1/2"						√	√

METRIC S. F.

METRICS. F.	PORT LEFT	PORT RIGHT	05	07	10	12	15	17	20
AB	NONE	NONE	√	√	√	√	√	√	√
VN	3/4"	NONE			√	√	√	√	
VQ	NONE	3/4"			√	√	√	√	
VS	3/4"	3/4"			√	√	√	√	
VT	3/4"	1"			√	√	√	√	
RV	1"	3/4"			√	√	√	√	
RU	3/4"	1 1/4"				√	√	√	
RW	1 1/4"	3/4"				√	√	√	
UL	1"	NONE			√	√	√	√	√
UR	NONE	1"			√	√	√	√	√
UM	1"	1"				√	√	√	
VU	1"	1 1/4" *				√	√	√	√
UX	1 1/4" *	1"				√	√	√	√
HO	1"	1 1/2" *						√	√
VO	1 1/2" *	1"						√	√
NO	1 1/4" *	NONE					√	√	√
UO	NONE	1 1/4" *					√	√	√
PO	1 1/4"	1 1/4"					√	√	√
QO	1 1/4"	1 1/2" *						√	√
SO	1 1/2" *	1 1/4"						√	√
UY	1 1/2" *	NONE					√	√	
TO	NONE	1 1/2"					√	√	

METRIC STR. THD.

METRIC STR. THD.	PORT LEFT	PORT RIGHT	05	07	10	12	15	17	20
AB	NONE	NONE	√	√	√	√	√	√	√
EN	3/4"	NONE			√	√	√		
TQ	NONE	3/4"			√	√	√		
ES	3/4"	3/4"			√	√			
ET	3/4"	1"			√	√			
EV	1"	3/4"			√	√	√	√	
NL	1"	NONE			√	√	√		
ER	NONE	1"			√	√	√	√	√
CM	1"	1"				√	√		
VE	1"	1 1/4" *					√	√	√
EX	1 1/4" *	1"					√	√	√
PA	1 1/4"	1 1/4"						√	√
QA	1 1/4"	1 1/2" *							√
SA	1 1/2" *	1 1/4"							√

7 GEAR SIZE

CODE	Gear Size	Displacement		Housing Width		Max Pressure	
		in.³/rev.	cm³/rev.	inch	mm	30 Series	31 Series
05	1/2"	0.99	16.1	1.25	31.75	2500 psi (172 bar)	3000 psi (207 bar)
07	3/4"	1. 48	24.2	1.5	38.1	2500 psi (172 bar)	3000 psi (207 bar)
10	1"	1.97	32.3	1.75	44.45	2500 psi (172 bar)	3000 psi (207 bar)
12	1 1/4"	2.46	40.4	2	50.8	2500 psi (172 bar)	3000 psi (207 bar)
15	1 1/2"	2.96	48.4	2.25	57.15	2500 psi (172 bar)	3000 psi (207 bar)
17	1 3/4"	3.45	56.5	2.5	63.5	2250 psi (155 bar)	2500 psi (172 bar)
20	2"	3.94	64.6	2.75	69.85	2250 psi (155 bar)	2500 psi (172 bar)

8 SHAFT TYPE

CODE

07 S.A.E. "C" 14 TOOTH SPLINE 1.250" dia - CONTINENTAL ONLY
12 KEYED SHAFT .75" dia. X 1.56 KEY CONTINENTAL ONLY
15 S.A.E. B KEYED .875" dia. WITH 5/8" -18 THREAD - CONTINENTAL ONLY
25 S.A.E. "B" 13 TOOTH SPLINE .88" dia
30 S.A.E. "B" KEYED .88" dia 1/4" X 3/8" X1" KEY
43 S.A.E. B B KEYED 1" dia. 1/4" X 3/8" X 1 1/4" KEY
65 S.A.E. "B" 13 TOOTH SPLINE .875" dia TYPE 2
66 S.A.E. "B" KEYED .88" dia 1/4" X3/8" X1" KEY TYPE 2
67 S.A.E. B B KEYED 1" dia. 1/4" X3/8"X 1 1/4" KEY TYPE 2
68 6 TOOTH SPLINE 1" dia.
95 S.A.E. A 9 TOOTH SPLINE .62" dia.
98 S.A.E. B B 15 TOOTH SPLINE 1" dia.

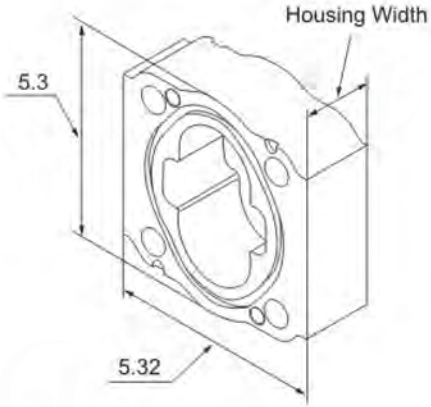

9 BEARING CARRIERS ORIENTATION IS FROM THE SHAFT END

NPT PORT		CODE	
IN	OUT	CW	CCW
NONE	NONE	C	D
NONE	NONE	A	J
1"	NONE	TB	VB
1 1/4"	NONE	BT	BV
1"	3/4"	TX	XT
1 1/4"	3/4"	VX	XV
1 1/4"	1"	VZ	ZV
1"	3/4"	TJ	JT
1 1/4"	3/4"	VJ	JV
1 1/4"	1"	VK	KV
1 1/2"	1"	KW	WK
1"	3/4"	ZX	XZ
1"	3/4"	ZS	SZ

S.A.E. ORING		CODE	
1"	NONE	CB	BC
1 1/4"	NONE	DB	BD
1 1/2"	NONE	FB	BF
NONE	3/4"	PJ	JP
1"	3/4"	CJ	JC
1 1/4"	3/4"	DJ	JD
1 1/2"	3/4"	FJ	JF
1 1/4"	1"	DK	KD
1 1/2"	1"	FK	KF
1"	3/4"	KJ	JK
1"	3/4"	KX	XK

S.A.E. SPLIT FLANGE		CODE	
IN	OUT	CW	CCW
1"	NONE	LB	BL
1 1/4"	NONE	MB	BM
1 1/2"	NONE	NB	BN
NONE	3/4"	BR	RB
1"	3/4"	LR	RL
1 1/4"	3/4"	MR	RM
1 1/2"	3/4"	NR	RN
1 1/4"	1"	MS	SM
1 1/2"	1"	NS	SN
1"	3/4"	LX	XL
1 1/4"	3/4"	MX	XM
1 1/2"	3/4"	NX	XN
1 1/4"	1"	MZ	ZM
1 1/2"	1"	NZ	ZN
1"	3/4"	SR	RS
1"	3/4"	RZ	ZR

MOTORS ONLY		CODE	
IN	OUT	DUAL	
NONE	NONE	B	
1"	1"	TT	NPT
1 1/4"	1 1/4"	VV	NPT
1"	1"	CC	SAE O RING
1 1/4"	1 1/4"	BB	SAE O RING
1 1/2"	1 1/2"	FF	SAE O RING
1"	1"	LL	SAE SPLIT FLANGE
1 1/4"	1 1/4"	MM	SAE SPLIT FLANGE
1 1/2"	1 1/2"	NN	SAE SPLIT FLANGE

10 CONNECTING SHAFT USE CODE #1 FOR ALL MULTIPLE UNITS

50/51 Series Gear Pump & Motor

◇Standardization, universalization , serialization design . Connecting dimensions are SAE standard, multiple assemblies are available.

◇Displacement range: 20.9ml/r -125.4 ml/r ,
Max rated pressure: 207bar, Intermittent: 245bar
Speed range: 600-2400 RPM .

PERFORMANCE

Bearing series pressure and displacement

CODE		05	07	10	12	15	17	20	22	25	27	30
Gear Width		1/2"	3/4"	1"	1-1/4"	1-1/2"	1-3/4"	2"	2-1/4"	2-1/2"	2-3/4"	3"
Displacement		1.28	1.91	2.55	3.19	3.83	4.46	5.1	5.74	6.38	7.01	7.66
		20.9	31.3	41.8	52.2	62.7	73.1	83.6	94	104.5	114.9	125.4
Max Pressure	50	2500	2500	2500	2500	2500	2000	2000	2000	2000	2000	1800
		172	172	172	172	172	145	145	145	145	145	125
	51	3000	3000	3000	3000	3000	3000	2500	2500	2500	2500	2250
		207	207	207	207	207	207	172	172	172	172	145
Speed RPM		600-2400										

Flow : GPM/LPM Pressure : PSI/bar

P50/51 Flow and Power data at 2500 PSI (172 bar)

Speed RPM	Gear Width Output (gpm/lpm) and Inches (HP/KW)													
	1"		1-1/4"		1-1/2"		1-3/4"		2"		2-1/4"		2-1/2"	
	Flow	Power	Flow	Power	Flow	Power	Flow	Power	Flow	Power	Flow	Power	Flow	Power
900	32	14	39.5	17	49	20	57	23	66	26	75.5	29	83.5	32
	8.5	19	10.5	22	13	26	15	30	17.5	34	20	38	22	42
1200	45.5	18	57	22	68	26	79.5	30	91	34	102	38	114	42
	12	25	15	30	18	34	21	40	24	45	27	51	30	56
1500	57	23	72	27	87	32	102	37	117	42	132	47	148	51
	15	31	19	37	23	43	27	50	31	56	35	63	39	69
1800	68	27	87	33	104	38	123	44	142	50	159	56	178	61
	18	36	23	44	27.5	51	32.5	59	37.5	67	42	75	47	82
2100	81.5	31	102	38	123	44	146	51	167	58	187	65	208	72
	21.5	42	27	51	32.5	60	38.5	69	44	78	49.5	87	55	96
2400	94.5	35	117	43	140	51	167	59	193	66	216	74	240	82
	25	47	31	57	37	68	44	79	51	89	57	99	63.5	110

Flow: GPM/LPM Power : HP/kW

Performance data shown are the average results based on a series of laboratory tests of production units and are not necessarily representative of any one unit. Tests were run with the oil reservoir temperature at 120 F and viscosity 150 SSU at 100 F. Requests for more specific data should be directed to our Product Support Department through our sales representatives.

M51 Motor performance data at 2500 PSI (172 bar).

Speed RPM	Torque: In.-lbs. / Nm Flow: GPM/LPM Power: HP/KW											
	1"			1-1/2"			2"			2-1/2"		
	Output		Input	Output		Input	Output		Input	Output		Input
	Torque	Power	Flow	Torque	Power	Flow	Torque	Power	Flow	Torque	Power	Flow
800	825	10.5	10.5	1310	16.5	15.5	1810	23	21	2330	29.5	26
	93	8	39.5	148	12.5	58.5	204.5	17	79.5	263.5	22	98.5
1200	850	16	15.5	1340	25.5	22.5	1830	35	30.5	2340	44.5	37.5
	96	12	58.5	151.5	19	85	207	26	115	264.5	33	142
1600	830	21	20	1330	34	30	1805	46	40	2300	58.5	49.5
	94	15.5	75.5	150.5	25.5	114	204	34.5	151	260	43.5	187
2000	800	25.5	25	1290	41	37	1770	56	49	2250	71.5	61.5
	90.5	19	94.5	146	30.5	140	200	42	185	254	53.5	233

Torque : In. -lbs./Nm Flow : GPM/LPM Power : HP/kW

Dimensional Date

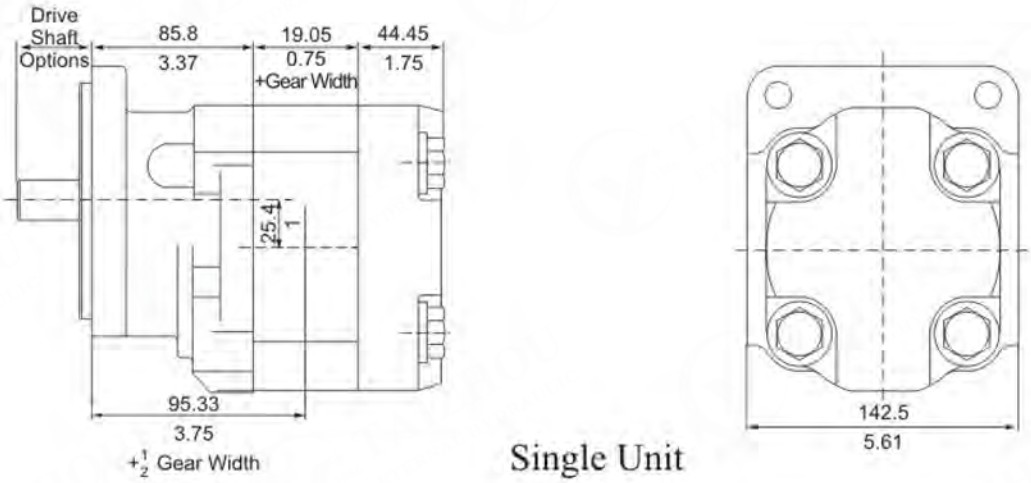

Single Unit

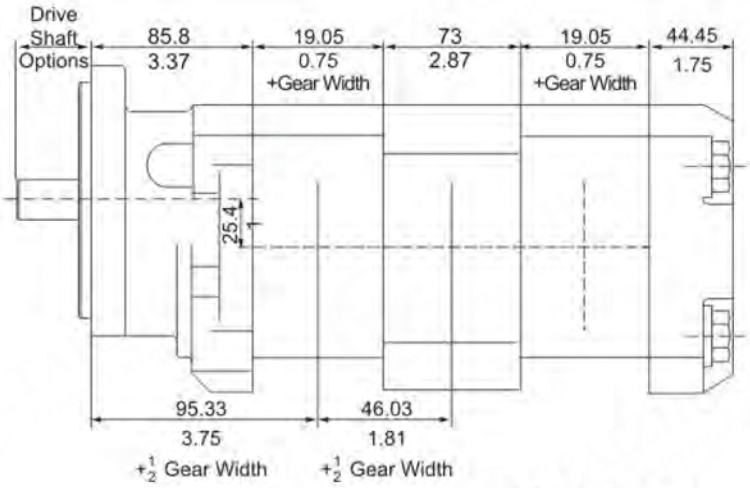

Multiple Unit

50/51 Series Coding

REPEAT FOR TANDEM UNITS

1	50/51	2	3	4	5	6	7	8	9	6	7	10

1 PUMP / MOTOR

P PUMP
M MOTOR

2 UNIT

A SINGLE UNIT
B TANDEM UNITS
C SINGLE OR TANDEM WITH A CONTINENTAL SHAFT

3 SHAFT END COVER

1 PUMP WITHOUT SHAFT BEARING CLOCKWISE ROTATION
2 PUMP WITHOUT SHAFT BEARING COUNTER CLOCKWISE ROTATION
3 PUMP WITHOUT SHAFT BEARING DOUBLE ROTATION
4 PUMP WITH SHAFT BEARING CLOCKWISE ROTATION
5 PUMP WITH SHAFT BEARING COUNTER CLOCKWISE ROTATION
6 PUMP WITH SHAFT BEARING DOUBLE ROTATION
8 MOTOR WITH SHAFT BEARING 1/4" DRAIN PORT
9 MOTOR WITHOUT SHAFT BEARING & 1/4" DRAIN PORT

4 SHAFT END COVER

00 PAD MOUNT
42 S.A.E. 4 BOLT "B" MOUNT
78 S.A.E. 4 BOLT "C" MOUNT
91 31/51 PIGGY BACK MOUNT
92 76/31 PIGGY BACK MOUNT
94 S.A.E. 2 BOLT "A" MOUNT
96 S.A.E. 2 BOLT "B" MOUNT type 2
97 S.A.E. 2 BOLT "B" MOUNT
98 S.A.E. 2 BOLT "C" MOUNT
99 S.A.E. 2 BOLT "C" MOUNT type 2

5 PORT END COVER CODES

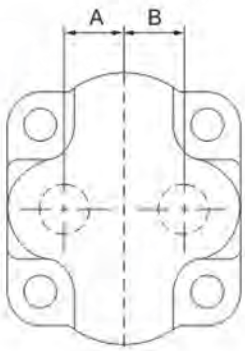

"O" Ring Ports

CODE				PORT SIZE			
SINGLE		TANDEM		LEFT	RIGHT	A	B
CE	CY	CI	CY	3/4"	NONE	N/A	1.38
DE	DY	DI	DY	NONE	3/4"	1.38	N/A
FE	FY	FI	FY	3/4"	3/4"	1.38	1.38

N.P.T. PORTS

CODE				PORT SIZE			
BE	BY	BI	BY	NONE	NONE	N/A	N/A
KE	KY	KI	KY	3/4"	NONE	N/A	1.38
LE	LY	LI	LY	NONE	3/4"	1.38	N/A
ME	MY	MI	MY	3/4"	3/4"	1.38	1.38

METRIC STR. THREAD PORTS

NE	NI	NY	3/4"	NONE	N/A	1.38
PE	PI	PY	NONE	3/4"	1.38	N/A
QE	QI	QY	3/4"	3/4"	1.38	1.38

B.S.P.P PORTS

WE	WI	WY	3/4"	NONE	N/A	1.38
XE	XI	XY	NONE	3/4"	1.38	N/A
ZE	ZI	ZY	3/4"	3/4"	1.38	1.38

WITH SUPPORT STUDS
WITHOUT SUPPORT STUDS

6 Gear Housing

◇N.P.T. PORTING IS NOT RECOMMENDED FOR PRESSURES ABOVE 1500 P.S.I.
◇PORTS MARKED WITH A "O" ARE RECOMMENDED PORTING, FOR ALL OTHER PORTING PLEASE CONSULT THE FACTORY
◇SHADED CELLS ARE GOOD FOR MOTOR UNITS
◇ORIENTATION IS VIEWED FROM THE SHAFT END

NPT PORT

NPT.CODE	PORT LEFT	PORT RIGHT	05	07	10	12	15	17	20	22	25
AB	NONE	NONE	√	√	√	√	√	√	√	√	√
IC	3/4"	NONE			√						
ID	NONE	3/4"			√	√	√	√			
IF	3/4"	3/4"			√	√	√	√	√		
IG	3/4"	1"			√	√	√				
IH	3/4"	1 1/4"					√				
IJ	1"	3/4"			√	√	√	√	√		
IK	1 1/4"	3/4"					√				
YC	1"	NONE				√	√	√	√	√	
YD	NONE	1"				√	√	√	√	√	
YF	1"	1"				√	√	√	√	√	√
YG	1"	1 1/4" *					√	√	√	√	
YH	1"	1 1/2"									√
YJ	1 1/4" *	1"					√	√	√	√	√
YK	1 1/2"	1"									√
IA	1 1/4" *	NONE					√	√	√	√	√
IB	NONE	1 1/4" *					√	√	√	√	√
YL	1 1/4"	1 1/4"						√	√	√	√
YM	1 1/4"	1 1/2" *							√	√	√
YP	1 1/2"	1 1/4"							√	√	√
YR	1 1/2"	1 1/2"							√	√	√
YA	1 1/2"	NONE							√	√	√
YB	NONE	1 1/2"							√	√	√

BSPP PORT

BSPP.CODE	PORT LEFT	PORT RIGHT	05	07	10	12	15	17	20	22	25
AB	NONE	NONE	√	√	√	√	√	√	√	√	√
YN	3/4"	NONE			√	√					
YQ	NONE	3/4"			√	√	√	√			
YS	3/4"	3/4"				√	√				√
YT	3/4"	1"			√	√	√				
YU	3/4"	1 1/4"			√	√	√	√			
YV	1"	3/4"			√	√	√	√	√		
YW	1 1/4"	3/4"			√	√	√	√			
SL	1"	NONE			√	√	√				
RQ	NONE	1"					√	√	√	√	√
MP	1"	1"					√	√	√	√	√
VY	1"	1 1/4" *					√	√	√	√	√
IX	1 1/4" *	1"					√	√	√	√	√
NJ	1 1/4" *	NONE					√	√	√		
UI	NONE	1 1/4" *								√	√
PF	1 1/4"	1 1/4"								√	√
IQ	1 1/4"	1 1/2"									√
IS	1 1/2"	1 1/4"									√

O.D TUBE.

O.D TUBE.CODE	PORT LEFT	PORT RIGHT	05	07	10	12	15	17	20	22	25
AB	NONE	NONE	√	√	√	√	√	√	√	√	√
EC	3/4"	NONE			√	√	√	√	√		
ED	NONE	3/4"			√	√	√	√	√		
EF	3/4"	3/4"			√	√	√	√	√		
EG	3/4"	1"			√	√	√				
EH	3/4"	1 1/4"					√	√			
EJ	1"	3/4"			√	√	√	√	√		
EK	1 1/4"	3/4"					√	√			
AC	1"	NONE			√	√	√	√			
AD	NONE	1"			√	√	√	√			
AF	1"	1"					√	√	√	√	√
AG	1"	1 1/4" *					√	√	√	√	√
AH	1"	1 1/2"						√	√	√	
AJ	1 1/4" *	1"					√	√	√	√	√
AK	1 1/2" *	1"					√	√	√	√	√
AL	1 1/4"	1 1/4"							√	√	√
AM	1 1/4"	1 1/2" *							√	√	√
AP	1 1/2" *	1 1/4"							√	√	√
AR	1 1/2"	1 1/2"									√
AA	1 1/4"	NONE					√	√	√	√	√
AO	NONE	1 1/4" *					√	√	√	√	√
AE	1 1/2" *	NONE							√	√	
AU	NONE	1 1/2" *							√	√	

METRIC STR. THD.

METRIC STR.THD.	PORT LEFT	PORT RIGHT	05	07	10	12	15	17	20	22	25
AB	NONE	NONE	√	√	√	√	√	√	√	√	√
EN	3/4"	NONE			√	√	√	√			
TQ	NONE	3/4"			√	√	√	√			
ES	3/4"	3/4"			√	√					
ET	3/4"	1"			√	√	√	√	√		
EV	1"	3/4"			√	√	√	√	√		
NL	1"	NONE					√	√	√	√	
ER	NONE	1"					√	√	√	√	
CM	1"	1"					√	√	√		
VE	1"	1 1/4" *					√	√	√	√	√
EX	1 1/4"*	1"					√	√	√	√	√
UA	NONE	1 1/4"							√	√	√
PA	1 1/4"	1 1/4"							√	√	√
QA	1 1/4"	1 1/2" *							√	√	√
SA	1 1/2"	1 1/4"							√	√	√

SPLIT FLANGE

SPLIT FLANGE	PORT LEFT	PORT RIGHT	05	07	10	12	15	17	20	22	25
AB	NONE	NONE	√	√	√	√	√	√	√	√	√
UC	3/4"	NONE			√	√	√	√			
UD	NONE	3/4"			√	√	√	√			
UF	3/4"	3/4"			√	√	√	√	√	√	√
UG	3/4"	1"			√	√	√				
UH	3/4"	1 1/4"				√	√	√			
UJ	1"	3/4"			√	√	√	√	√		
UK	1 1/4"	3/4"				√	√	√			
OC	1"	NONE			√	√	√	√	√	√	√
OD	NONE	1"			√	√	√	√	√	√	√
OF	1"	1"				√	√	√	√	√	√
OG	1"	1 1/4" *				√	√	√	√		
OH	1"	1 1/2" *					√	√	√	√	√

SPLIT FLANGE

SPLIT FLANGE	PORT LEFT	PORT RIGHT	05	07	10	12	15	17	20	22	25
OJ	1 1/4" *	1"				√	√	√	√	√	√
OK	1 1/2" *	1"					√	√	√	√	√
OL	1 1/4"	1 1/4"					√	√	√	√	√
OM	1 1/4"	1 1/2" *					√	√	√	√	√
ON	1 1/4"	2"							√	√	√
OP	1 1/2" *	1 1/4"					√	√	√	√	√
OQ	2"	1 1/4"							√	√	
OR	1 1/2"	1 1/2"						√	√	√	√
OS	1 1/2"	2"							√	√	√
OV	2"	1 1/2"							√	√	√
OX	2"	2"									√
OA	1 1/4" *	NONE				√	√	√	√	√	√
OB	NONE	1 1/4" *				√	√	√	√	√	√
OE	1 1/2" *	NONE					√	√	√	√	√
OU	NONE	1 1/2" *					√	√	√	√	√
UB	1"	2"							√	√	√
UQ	2"	1"							√	√	√
XB	2"	NONE							√	√	√
ZB	NONE	2"							√	√	√

METRIC S. F.

METRIC S. F.	PORT LEFT	PORT RIGHT	05	07	10	12	15	17	20	22	25
AB	NONE	NONE	√	√	√	√	√	√	√	√	√
VN	3/4"	NONE			√	√	√	√			
VQ	NONE	3/4"			√	√	√	√			
VS	3/4"	3/4"			√	√	√				
VT	3/4"	1"			√	√	√	√	√		
RV	1"	3/4"			√	√	√	√	√		
RU	3/4"	1 1/4"			√	√	√				
RW	11/4"	3/4"			√	√	√				
UL	1"	NONE				√	√	√	√	√	
UR	NONE	1"				√	√	√	√	√	
UM	1"	1"				√	√	√	√	√	
VU	1"	1 1/4" *				√	√	√	√	√	√
UX	1 1/4" *	1"				√	√	√	√	√	√
HO	1"	1 1/2" *					√	√	√		
VO	1 1/2" *	1"					√	√	√		
NO	1 1/4" *	NONE						√	√	√	√
UO	NONE	1 1/4" *						√	√	√	√
PO	1 1/4"	1 1/4"					√	√	√	√	√
QO	1 1/4"	1 1/2" *					√	√	√	√	√
SO	1 1/2" *	1 1/4"					√	√	√	√	√
JR	1 1/4"	2"							√	√	√
JM	2"	1 1/4"							√	√	√
UY	1 1/2 " *	NONE					√	√	√	√	
TO	NONE	1 1/2" *					√	√	√	√	
SV	1 1/2"	1 1/2"							√	√	√
JN	1 1/2"	2"							√	√	√
JQ	2"	1 1/2"							√	√	√

7 GEAR SIZE

CODE	Gear Size	Displacement		Housing Width		Max Pressure	
		in.³/rev.	cm³/rev.	inch	mm	50 Series	51 Series
05	1/2"	1.28	20.9	1.25	31.75	2500 psi (172 bar)	3000 psi (207 bar)
07	3/4"	1.91	31.3	1.5	38.1	2500 psi (172 bar)	3000 psi (207 bar)
10	1"	2.55	41.8	1.75	44.45	2500 psi (172 bar)	3000 psi (207 bar)
12	1 1/4"	3.19	52.2	2	50.8	2500 psi (172 bar)	3000 psi (207 bar)
15	1 1/2"	3.83	62.7	2.25	57.15	2500 psi (172 bar)	3000 psi (207 bar)
17	1 3/4"	4.46	73.1	2.5	63.5	2000 psi (138 bar)	3000 psi (207 bar)
20	2"	5.1	83.6	2.75	69.85	2000 psi (138 bar)	2500 psi (172 bar)
22	2-1/4"	5.74	94	3	76.2	2000 psi (138 bar)	2500 psi (172 bar)
25	2-1/2"	6.38	104.5	3.25	82.55	2000 psi (138 bar)	2500 psi (172 bar)

8 SHAFT TYPE

CODE

07 S.A.E. "C" 14 TOOTH SPLINE 1.250" dia - CONTINENTAL ONLY
11 S.A.E. "C" KEYED 1.25" dia 5/16" X 15/32" X 1 1/2" KEY
25 S.A.E. "B" 13 TOOTH SPLINE .88" dia
43 S.A.E. B B KEYED 1" dia. 1/4" X 3/8" X 1 1/4" KEY
65 S.A.E. "B" 13 TOOTH SPLINE .875" dia TYPE 2
67 S.A.E. B B KEYED 1" dia. 1/4" X3/8"X 1 1/4" KEY TYPE 2
73 S.A.E. "C" KEYED 1.25" dia. 5/16" X 15/32" X 2 1/4" KEY
98 S.A.E. B B 15 TOOTH SPLINE 1" dia.

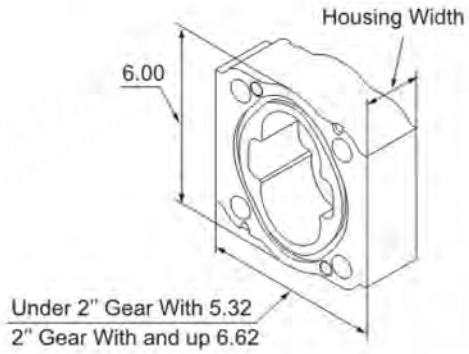

9 BEARING CARRIERS ORIENTATION IS FROM THE SHAFT END

NPT PORT		CODE	
IN	OUT	CW	CCW
NONE	NONE	C	D
NONE	NONE	A	J
1"	NONE	TB	VB
1 1/4"	NONE	BT	BV
1 1/2	NONE	WB	BW
1"	3/4"	TX	XT
1 1/4"	3/4"	VX	XV
1 1/2"	3/4"	WX	XW
1 1/4"	1"	VZ	ZV
1 1/2"	1"	WZ	ZW
1"	1-3/4"	TJ	JT
1 1/4"	3/4"	VJ	JV
1 1/4"	1"	VK	KV
1 1/2"	1"	KW	WK
1"	3/4"	ZX	XZ

S.A.E. SPLIT FLANGE		CODE	
IN	OUT	CW	CCW
1"	NONE	LB	BL
1 1/4"	NONE	MB	BM
1 1/2"	NONE	NB	BN
NONE	3/4"	BR	RB
1"	3/4"	LR	RL
1 1/4"	3/4"	MR	RM
1 1/2"	3/4"	NR	RN
1 1/4"	1"	MS	SM
1 1/2"	1"	NS	SN
1"	3/4"	LX	XL
1 1/4"	3/4"	MX	XM
1 1/4"	1"	NX	XN
1 1/2"	1"	MZ	ZM
		NZ	ZN
1"	3/4"	SR	RS

S.A.E. ORING		CODE	
1"	NONE	CB	BC
1 1/4"	NONE	DB	BD
1 1/2"	NONE	FB	BF
NONE	3/4"	PJ	JP
1"	3/4"	CJ	JC
1 1/4"	3/4"	DJ	JD
1 1/2"	3/4"	FJ	JF
1 1/4"	1"	DK	KD
1 1/2"	1"	FK	KF
1"	3/4"	CR	RC

MOTORS ONLY		CODE	
IN	OUT	DUAL	
NONE	NONE	B	
1"	1"	TT	NPT
1 1/4"	1 1/4"	VV	NPT
1 1/2"	1 1/2"	WW	NPT
1"	1"	CC	SAE O RING
1 1/4"	1 1/4"	BB	SAE O RING
1 1/2"	1 1/2"	FF	SAE O RING
1"	1"	LL	SAE SPLIT FLANGE
1 1/4"	1 1/4"	MM	SAE SPLIT FLANGE
1 1/2"	1 1/2"	NN	SAE SPLIT FLANGE

10 CONNECTING SHAFT USE CODE #1 FOR ALL MULTIPLE UNITS

75/76 Series Gear Pump & Motor

◇Standardization, universalization , serialization design . Connecting dimensions are SAE standard, multiple assemblies are available.

◇Displacement range: 33.58ml/r - 201.5 ml/r ,
Max rated pressure: 207bar, Intermittent: 245bar
Speed range: 600-2400 RPM .

PERFORMANCE

Bearing series pressure and displacement

CODE		05	07	10	12	15	17	20	22	25	27	30
Gear Width		1/2"	3/4"	1"	1-1/4"	1-1/2"	1-3/4"	2"	2-1/4"	2-1/2"	2-3/4"	3"
Displacement		2.05	3.07	4.1	5.12	6.15	7.17	8.2	9.22	10.3	11.3	12.3
		33.58	50.28	67.15	83.85	100.7	117.5	134.4	151.1	167.9	184.7	201.5
Max Pressure	75	2500	2500	2500	2500	2500	2500	2500	2250	2250	2000	2000
		172	172	1 72	172	172	172	172	155	155	145	145
	76	3000	3000	3000	3000	3000	2500	2500	2500	2500	2000	2000
		207	207	207	207	207	172	172	172	172	145	145
Speed RPM		600-2400										

Flow : GPM/LPM Pressure : PSI/bar

P75/76 Flow and Power data at 2500 PSI (172 bar)

Speed RPM	Gear Width Output (gpm/lpm) and Inches (HP/KW)									
	1"		1-1/4"		1-1/2"		1-3/4"		2"	
	Flow	Power	Flow	Power	Flow	Power	Flow	Power	Flow	Power
900	43.5	19	58.5	24	74	29	87	34	102	38
	11.5	26	15.5	32	19.5	39	23	45	27	51
1200	64.5	26	83.5	32	102	39	121	45	142	51
	17	35	22	43	27	52	32	60	37.5	69
1500	83.5	33	110	41	134	49	157	57	182	65
	22	44	29	55	35.5	65	41.5	76	48	87
1800	104	39	134	49	165	59	193	69	223	79
	27.5	53	35.5	66	43.5	79	51	93	59	106
2100	125	46	159	58	195	69	227	81	263	92
	33	62	42	77	51.5	93	60	108	69.5	124
2400	144	53	185	66	225	79	265	92	303	105
	38	71	49	88	59.5	106	70	124	80	141

Flow: GPM/LPM Power : HP/kW

P75/76 Flow and Power data at 2500 PSI (172 bar) (continued)

Speed RPM	Gear Width Output (gpm/lpm) and Inches (HP/KW)							
	2-1/4"		2-1/2"		2-3/4"		3"	
	Flow	Power	Flow	Power	Flow	Power	Flow	Power
900	115.5	43	130.5	48	144	42	159	46
	30.5	58	34.5	64	38	57	42	62
1200	159	58	182	64	199	57	220	62
	42	78	48	86	52.5	76	58	83
1500	206	73	231	81	254	72	280	78
	54.5	98	61	109	67	96	74	105
1800	250	89	280	99	308	87	341	95
	66	119	74	132	81.5	116	90	127
2100	295	104	329	115	365	101	401	111
	78	139	87	154	96.5	136	106	148
2400	341	118	382	132	420	116	462	126
	90	159	101	176	111	155	122	169

＊ Input data at 2000 PSI (138 bar) rated pressure.

M76 Motor performance data at 2500 PSI (172 bar).

Speed RPM	Torque: In.-lbs. / Nm Flow: GPM/LPM Power: HP/KW								
	1"			1-1/2"			2"		
	Output		Input	Output		Input	Output		Input
	Torque	Power	Flow	Torque	Power	Flow	Torque	Power	Flow
800	1410	18	20.5	2140	27	28	2875	36.5	35.5
	159.5	13.5	77.5	242	20	106	325	27	134
1200	1400	26.5	27.5	2140	41	38	2870	54.5	49.5
	158	20	104	242	30.5	144	324.5	40.5	187
1600	1375	35	34	2110	53.5	49	2830	72	64
	155.5	26	129	238.5	40	185	319.5	53.5	242
2000	1350	43	41.5	2090	66.5	59	2800	89	78
	152.5	32	157	236	49.5	223	316.5	66.5	295

M76 Motor performance data（Continued）

Speed RPM	Torque: In.-lbs. / Nm Flow: GPM/LPM Power: HP/KW					
	2-1/2"			3"		
	Output		Input	Output		Input
	Torque	Power	Flow	Torque	Power	Flow
800	3650	46.5	43	3625	46	50.5
	412.5	34.6	163	409.5	34.5	191
1200	3650	69.5	60.5	3575	68	72
	412.5	52	229	404	50.5	273
1600	3600	91.5	78.5	3500	89	93
	406.5	68	297	395.5	66.5	352
2000	3500	111	96.5	3425	109	114

Dimensional Date

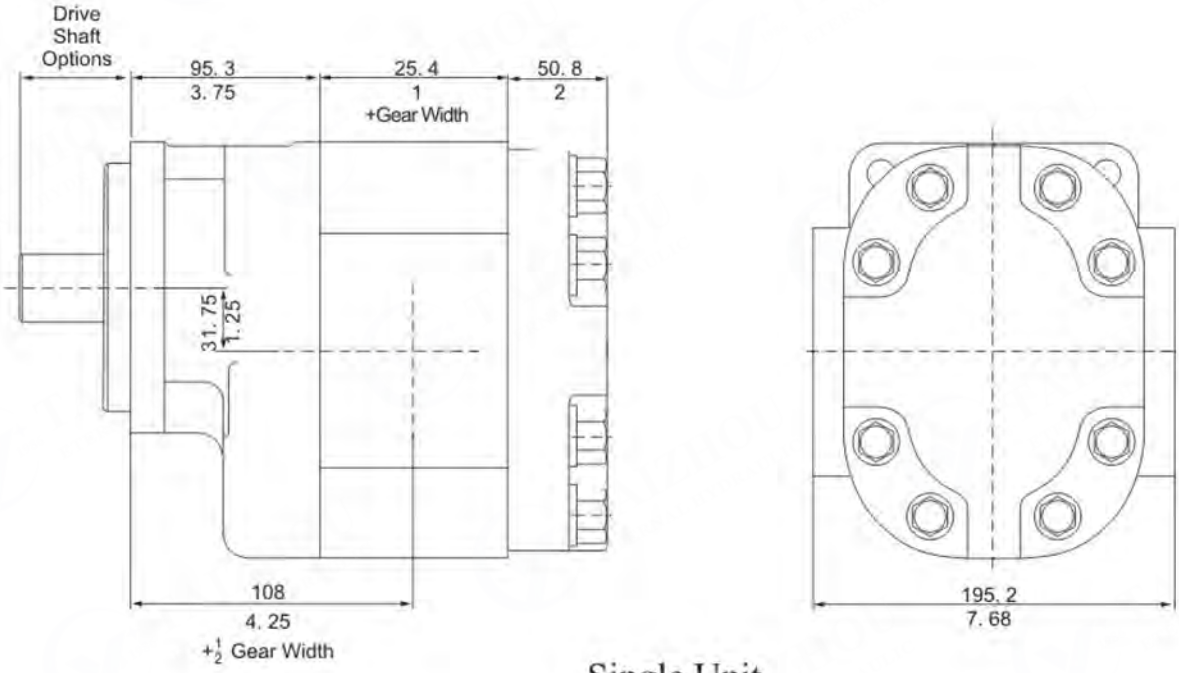

Single Unit

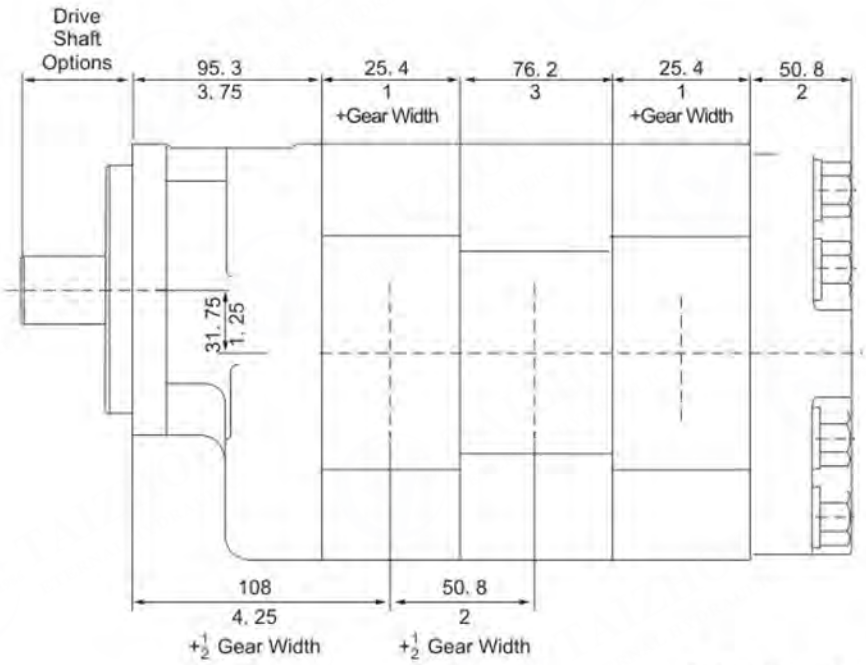

Multiple Unit

Performance data shown are the average results based on a series of laboratory tests of production units and are not necessarily representative of any one unit. Tests were run with the oil reservoir temperature at 120 F and viscosity 150 SSU at 100 F. Requests for more specific data should be directed to our Product Support Department through our sales representatives.

75/76 Series Coding

REPEAT FOR TANDEM UNITS

1	75/76	2	3	4	5	6	7	8	9	6	7	10

1 PUMP / MOTOR

P PUMP
M MOTOR

2 UNIT

A SINGLE UNIT
B TANDEM UNITS
C SINGLE OR TANDEM WITH A CONTINENTAL SHAFT

3 SHAFT END COVER

1 PUMP WITHOUT SHAFT BEARING CLOCKWISE ROTATION
2 PUMP WITHOUT SHAFT BEARING COUNTER CLOCKWISE ROTATION
3 PUMP WITHOUT SHAFT BEARING DOUBLE ROTATION
4 PUMP WITH SHAFT BEARING CLOCKWISE ROTATION
5 PUMP WITH SHAFT BEARING COUNTER CLOCKWISE ROTATION
6 PUMP WITH SHAFT BEARING DOUBLE ROTATION
8 MOTOR WITH SHAFT BEARING 1/4" DRAIN PORT
9 MOTOR WITHOUT SHAFT BEARING & 1/4" DRAIN PORT

4 SHAFT END COVER

42 S.A.E. 4 BOLT "B" MOUNT
78 S.A.E. 4 BOLT "C" MOUNT
80 S.A.E. 4 BOLT "D" MOUNT
98 S.A.E. 2 BOLT "C" MOUNT

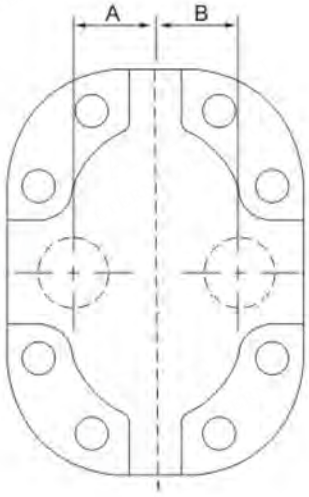

5 PORT END COVER CODES

NO PORTS

CODE				PORT SIZE			
SINGLE		TANDEM		LEFT	RIGHT	A	B
BE	BY	BI	BY	NONE	NONE	N/A	N/A

"O" Ring Ports

JE	JY	JI	JY	1"	1"	1.62	1.62

METRIC STR. THREAD PORTS

TE	TY	TI	TY	1"	1"	1.62	1.62

WITH SUPPORT STUDS
WITHOUT SUPPORT STUDS

6 Gear Housing

◇N.P.T. PORTING IS NOT RECOMMENDED FOR PRESSURES ABOVE 1500 P.S.I.
◇PORTS MARKED WITH A "O" ARE RECOMMENDED PORTING, FOR ALL OTHER PORTING PLEASE CONSULT THE FACTORY
◇SHADED CELLS ARE GOOD FOR MOTOR UNITS
◇ORIENTATION IS VIEWED FROM THE SHAFT END

NPT PORT

NPT.CODE	PORT LEFT	PORT RIGHT	05	07	10	12	15	17	20	22	25	27	30
AB	NONE	NONE	√	√	√	√	√	√	√	√	√	√	√
IC	3/4"	NONE											
ID	NONE	3/4"		√	√	√	√						
IF	3/4"	3/4"											
IG	3/4"	1"			√								
IH	3/4"	1 1/4"											
IJ	1"	3/4"			√	√	√						
IK	1 1/4"	3/4"											
YC	1"	NONE							√				
YD	NONE	1"				√	√	√	√				
YF	1"	1"			√	√							
YG	I"	1 1/4" *				√	√						
YH	I"	1 1/2"											
YJ	1 1/4" *	1"				√	√						
YK	1 1/2"	1"											
YL	1 1/4"	1 1/4"				√	√	√					
YM	1 1/4"	1 1/2" *											
YP	1 1/2"	1 1/4"											
YR	1 1/2"	1 1/2"											

BSPP PORT

BSPP. CODE	PORT LEFT	PORT RIGHT	05	07	10	12	15	17	20	22	25	27	30
AB	NONE	NONE	√	√	√	√	√	√	√	√	√	√	√
YN	3/4"	NONE			√	√							
YQ	NONE	3/4"		√	√	√	√	√	√				
YS	3/4"	3/4"											
YT	3/4"	1"		√									
YU	3/4"	1 1/4"											
YV	1"	3/4"											
YW	1 1/4"	3/4"											
SL	1"	NONE				√	√	√	√	√	√		
RQ	NONE	1"				√	√	√	√	√	√		
MP	1"	1"				√	√						
VY	1"	1 1/4" *					√	√	√	√	√	√	√
IX	1 1/4" *	1"					√	√	√	√	√	√	√
NJ	1 1/4" *	NONE					√	√	√				
UI	NONE	1 1/4" *									√	√	√
PF	1 1/4"	1 1/4"									√		
IQ	1 1/4"	1 1/2"									√	√	√
IS	1 1/2"	1 1/4"									√	√	√
HW	1"	1 1/2"					√	√					
VI	1 1/2"	1"					√	√					

SPLIT FLANGE

SPLIT FLANGE	PORT LEFT	PORT RIGHT	05	07	10	12	15	17	20	22	25	27	30
AB	NONE	NONE	√	√	√	√	√	√	√	√	√	√	√
UC	3/4"	NONE		√	√	√	√						
UD	NONE	3/4"		√	√	√	√						
UF	3/4"	3/4"		√									
UG	3/4"	1"		√	√								
UH	3/4"	1 1/4"											
UJ	1"	3/4"			√	√	√	√	√				
UK	1 1/4"	3/4"											
OC	1"	NONE				√							
OD	NONE	1"			√	√	√	√	√				
OF	1"	1"			√	√	√	√	√		√	√	√
OG	1"	1 1/4" *			√	√	√						
OH	1"	1 1/2" *				√	√	√	√	√			
OJ	1 1/4" *	1"			√	√	√	√	√	√	√		
OK	1 1/2" *	1"				√	√	√	√	√			
OL	1 1/4"	1 1/4"				√	√	√	√	√	√	√	√
OM	1 1/4"	1 1/2" *				√	√	√	√	√	√		
ON	1 1/4"	2"						√	√	√	√	√	√
OP	1 1/2" *	1 1/4"				√	√	√	√	√	√	√	√
OQ	2"	1 1/4"						√	√	√	√	√	√
OR	1 1/2"	1 1/2"							√	√	√	√	√
OS	1 1/2"	2"							√	√	√	√	√
OT	1 1/2"	2 1/2"									√	√	√
OV	2"	1 1/2"							√	√	√	√	√
OW	2 1/2"	1 1/2"									√	√	√
O	2"	2"										√	√
OA	1 1/4" *	NONE				√	√	√	√	√	√		
UB	1"	2"							√				
UQ	2"	1"							√				
OB	NONE	1 1/4" *				√	√	√	√	√	√		
OE	1 1/2" *	NONE							√	√			
OU	NONE	1 1/2" *							√	√	√	√	√
OY	2"	2 1/2"											√
OZ	2 1/2"	2"											√
UN	1 1/4"	2 1/2"									√		
US	2 1/2"	1 1/4"									√		

METRIC S.F.

METRIC S.F.	PORT LEFT	PORT RIGHT	05	07	10	12	15	17	20	22	25	27	30
AB	NONE	NONE	√	√	√	√	√	√	√	√	√	√	√
VN	3/4"	NONE		√	√	√	√						
VQ	NONE	3/4"		√	√	√	√						
VS	3/4"	3/4"		√	√								
VT	3/4"	1"		√	√								
RU	3/4"	1 1/4"			√								
RV	1"	3/4"		√	√	√	√	√	√				
RW	1 1/4"	3/4"			√								
UL	1"	NONE			√	√	√	√					
UR	NONE	1"			√	√	√	√					
UM	1"	1"			√	√	√	√	√				
VU	1"	1 1/4"*			√	√							
HO	1"	1 1/2"*				√	√						
U	1 1/4" *	1"			√	√	√	√	√	√	√		
VO	1 1/2" *	1"				√	√						
NO	1 1/4" *	NONE				√	√	√	√	√	√		
UO	NONE	1 1/4" *				√	√	√	√	√	√		
PO	1 1/4"	1 1/4"				√	√	√	√	√	√	√	√
QO	1 1/4"	1 1/2"*					√	√	√	√			
SO	1 1/2" *	1 1/4"					√	√	√	√	√	√	√
JR	1 1/4"	2"						√	√	√	√		
JM	2"	1 1/4"						√	√	√	√		
UY	1 1/2" *	NONE							√	√	√		
TO	NONE	1 1/2"*							√	√	√	√	√
SV	1 1/2"	1 1/2"							√	√	√	√	√
JN	1 1/2"	2"							√	√	√	√	√
JQ	2"	1 1/2"							√	√	√	√	√
J	1 1/2"	2 1/2"										√	√
LJ	2 1/2"	1 1/2"										√	√
JS	2"	2"											√

METRIC STR. THD

METRIC STR. THD	PORT LEFT	PORT RIGHT	05	07	10	12	15	17	20	22	25	27	30
AB	NONE	NONE	√	√	√	√	√	√	√	√	√	√	√
EN	3/4"	NONE		√	√	√	√						
TQ	NONE	3/4"		√	√	√	√						
ES	3/4"	3/4"		√	√								
ET	3/4"	1"		√									
EV	1"	3/4"		√	√	√	√						
NL	1"	NONE				√	√						
ER	NONE	1"				√	√						
CM	1"	1"			√	√	√						

O.D. TUBE

O.D. TUBE	PORT LEFT	PORT RIGHT	05	07	10	12	15	17	20	22	25	27	30
AB	NONE	NONE	√	√	√	√	√	√	√	√	√	√	√
EC	3/4"	NONE		√	√	√	√						
ED	NONE	3/4"		√	√	√	√						
EF	3/4"	3/4"		√									
EG	3/4"	1"		√		√	√						
EH	3/4"	1 1/4"			√								
EJ	1"	3/4"		√		√	√						
EK	1 1/4"	3/4"			√								
AC	1"	NONE											
AD	NONE	1"				√	√						
AF	1"	1"			√	√	√	√	√				
AG	1"	1 1/4" *			√	√							
AH	1"	1 1/2"					√						
AJ	1 1/4" *	1"			√	√							
AK	1 1/2"	1"					√						
AL	1 1/4"	1 1/4"					√	√	√	√	√		√
AM	1 1/4"	1 1/2" *					√	√					
AP	1 1/2"	1 1/4"					√	√					
AR	1 1/2"	1 1/2"						√		√	√		

7 GEAR SIZE

CODE	Gear Size	Displacement		Housing Width		Max Pressure	
		in.³/rev.	cm³/rev.	inch	mm	75 Series	76 Series
05	1/2"	2.05	33.6	1.5	38.1	2500 psi (172 bar)	3000 psi (207 bar)
07	3/4"	3.07	50.3	1.75	44.45	2500 psi (172 bar)	3000 psi (207 bar)
10	1"	4.1	67.2	2	50.8	2500 psi (172 bar)	3000 psi (207 bar)
12	1 1/4"	5.13	84	2.25	57.15	2500 psi (172 bar)	3000 psi (207 bar)
15	1 1/2"	6.15	100.8	2.5	63.5	2500 psi (172 bar)	3000 psi (207 bar)
17	1 3/4"	7.18	117.6	2.75	69.85	2500 psi (172 bar)	3000 psi (207 bar)
20	2"	8.2	134.4	3	76.2	2500 psi (172 bar)	2500 psi (172 bar)
22	2 1/4"	9.23	151.2	3.25	82.55	2250 psi (155 bar)	2500 psi (172 bar)
25	2 1/2"	10.25	168	3.5	88.9	2250 psi (155 bar)	2500 psi (172 bar)
27	2 3/4"	11.27	184.8	3.75	95.25	2000 psi (138 bar)	2000 psi (138 bar)
30	3"	12.3	201.6	4	101.6	2000 psi (138 bar)	2000 psi (138 bar)

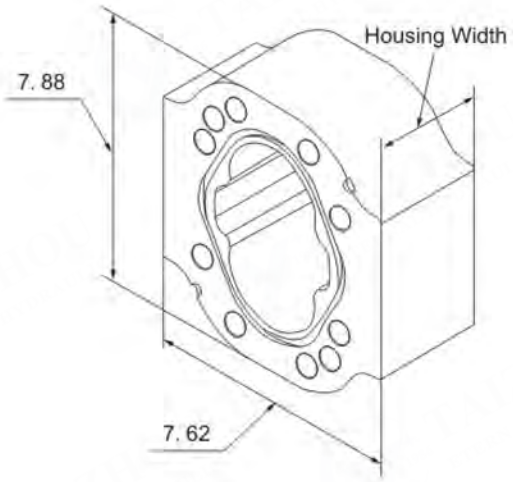

8 SHAFT TYPE

CODE

07 S.A.E. "C" 14 TOOTH SPLINE 1.250" dia - CONTINENTAL ONLY

11 S.A.E. "C" KEYED 1.25" dia 5/16" X 15/32" X 1 1/2" KEY

9 BEARING CARRIERS ORIENTATION IS FROM THE SHAFT END

NPT PORT		CODE	
IN	OUT	CW	CCW
NONE	NONE	C	D
NONE	NONE	A	U

S.A.E. ORING		CODE	
1"	NONE	CB	BC
1 1/4"	NONE	DB	BD
1 1/2"	NONE	FB	BF
NONE	3/4"	PJ	JP
1"	3/4"	CJ	JC
1 1/4"	3/4"	DJ	JD
1 1/2"	3/4"	FJ	JF
1 1/4"	1"	DK	KD
1 1/2"	1"	FK	KF
1"	3/4"	CR	RC
1 1/4"	3/4"	DR	RD
1 1/2"	3/4"	FR	RF
1 1/4"	1"	DS	SD
1 1/2"	1"	FS	SF

S.A.E. SPLIT FLANGE		CODE	
IN	OUT	CW	CCW
1"	NONE	LB	BL
1 1/4"	NONE	MB	BM
1 1/2"	NONE	NB	BN
NONE	3/4"	BR	RB
1"	3/4"	LR	RL
1 1/4"	3/4"	MR	RM
1 1/2"	3/4"	NR	RN
1 1/4"	1"	MS	SM
1 1/2"	1"	NS	SN
1"	3/4"	LX	XL
1 1/4"	3/4"	MX	XM
1 1/4"	1"	NX	XN
1 1/2"	1"	MZ	ZM
1"	3/4"	NZ	ZN
		SR	RS

MOTORS ONLY		CODE	
IN	OUT	DUAL	
NONE	NONE	B	
1"	1"	CC	SAE O RING
1 1/4"	1 1/4"	BB	SAE O RING
1"	1"	LL	SAE SPLIT FLANGE
1 1/4"	1 1/4"	MM	SAE SPLIT FLANGE
1 1/2"	1 1/2"	NN	SAE SPLIT FLANGE

10 CONNECTING SHAFT USE CODE #1 FOR ALL MULTIPLE UNITS

315 Series Gear Pump & Motor

◇Heavy duty, cast iron, external gear pump .
◇Standardization, universalization , serialization design .
◇Displacement range :10.2m/r -40.6 ml/r ,
Max rated pressure : 245bar , Intermittent :275bar ,
Speed range :400-3000 RPM

PERFORMANCE

Bushing series pressure and displacement

CODE	03	05	07	08	10	12	15	16	17	20
Gear Width	3/8"	1/2 "	3/4"	7/8 "	1"	1-1/4"	1-1/2"	1-5/8"	1-3/4"	2"
Theoretical Displacement	0.62	0.78	0.93	1.09	1.24	1.52	1.86	2.02	2.17	2.48
	10.2	12.7	15.2	17.8	20.3	25.4	30.5	33	35.6	40.6
Max Pressure Continuous	3500	3500	3500	3500	3500	3500	3300	3100	2900	2500
	245	245	245	245	245	245	225	215	200	175
Max Pressure Intermittent	4000	4000	4000	4000	4000	3850	3500	3350	3100	2750
	275	275	275	275	275	265	245	230	215	190
Speed RPM	400-3000									

Flow : GPM/LPM Pressure : PSI/bar

P315 Pump Flow and Power data

Speed RPM	Gear Width Output (gpm/lpm) and Inches (HP/KW)							
	1/2"		3/4"		1"		1-1/4"	
	245 bar		245 bar		245 bar		245 bar	
	Flow	Power	Flow	Power	Flow	Power	Flow	Power
900	8	4	12	8	17	8	21	10
	2	5	3.2	8	4.4	11	5.5	13
1200	11	5	17	8	23	11	29	13
	2.8	7	4.4	11	6	14	7.6	18
1500	14	7	21	10	29	13	36	16
	3.6	9	5.6	13	7.7	18	9.6	22
1800	17	8	26	12	35	16	44	20
	4.4	11	6.8	16	9.3	21	11.6	27
2100	20	9	30	14	41	18	51	23
	5.2	12	8.1	19	10.9	25	13.6	31
2400	23	11	35	16	47	21	59	26
	6	14	9.3	21	12.5	28	15.6	35
3000	29	13	44	20	59	26	74	33
	7.7	18	11.7	27	15.7	35	19.6	44

Flow: GPM/LPM Power : HP/kW

P315 Pump Flow and Power data (continued)

Speed RPM	Gear Width Output (gpm/lpm) and Inches (HP/KW)					
	1-1/2"		1-3/4"		2"	
	225 bar		220 bar		175 bar	
	Flow	Power	Flow	Power	Flow	Power
900	26	11	30	11	34	11
	6.7	15	7.9	15	9	15
1200	35	15	40	15	46	15
	9.2	20	10.7	21	12.2	20
1500	44	19	51	19	58	19
	11.6	25	13.5	26	15.4	25
1800	53	22	62	23	70	23
	14	30	16.3	31	18.6	30
2100	62	26	72	27	83	26
	16.4	35	19.1	36	21.8	35
2400	71	30	83	31	95	30
	18.8	40	21.9	41	25.1	40
3000	90	37	104	38	119	38
	23.7	50	27.6	51	31.5	51

M315 Motor performance data.

Speed RPM	1"		1-1/4"		1-1/2"		1-3/4"		2"	
	3500PSI/245bar		3500PSI/245bar		3300PSI/225bar		2900PSI/200bar		2500PSI/175bar	
	Flow	Torque	Flow	Torque	Flow	Torque	Flow	Torque	Flow	Torque
900	7.1	665	8.3	830	9.6	940	10.9	965	12.2	950
	27	75.1	32	93.8	37	106.2	41	109	46	107.3
1200	8.8	665	10.5	830	12.2	940	13.8	965	15.5.	950
	33	75.1	40	93.8	46	106.2	52	109	59	107.3
1500	10.6	660	12.6	825	14.7	935	16.7	955	18.8	945
	40	74.6	48	93.2	56	105.6	63	107.9	71	106.8
1800	12.3	655	14.7	820	17.2	930	19.6	950	22.1	940
	46	74	56	92.6	65	105.1	74	107.3	84	106.2
2100	14	655	16.8	820	19.7	930	22.5	950	25.4	940
	53	74	64	92.6	75	105.1	85	107.3	96	106.2
2400	15.7	640	18.9	800	22.2	910	25.4	930	28.8	920
	59	72.3	72	90.4	84	102.8	96	105.1	109	103.9
3000	19	640	23	800	27.2	905	31.2	925	35.3	915
	72	72.3	87	90.4	103	102.3	118	104.5	134	103.4

Torque: In.-lbs. / Nm Flow: GPM/LPM

Dimensional Date

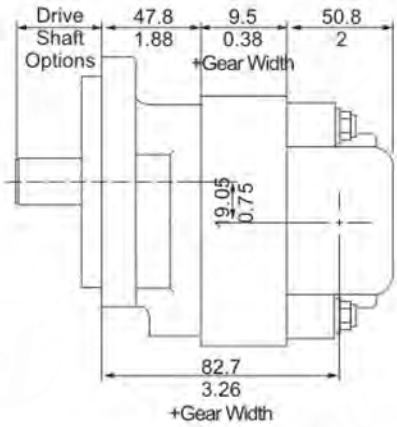

Single Unit

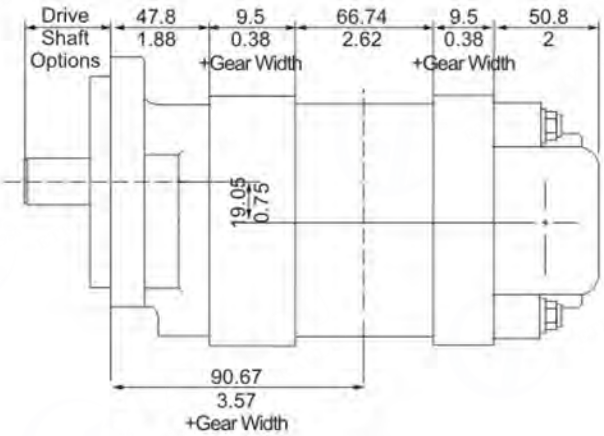

Multiple Unit

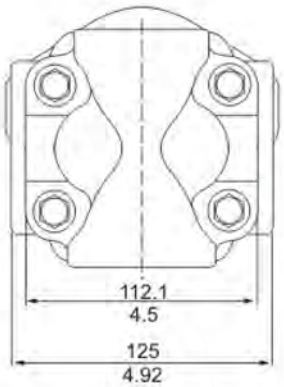

Single Unit

Performance data shown are the average results based on a series of laboratory tests of production units and are not necessarily representative of any one unit. Tests were run with the oil reservoir temperature at 120 F and viscosity 150 SSU at 100 F. Requests for more specific data should be directed to our Product Support Department through our sales representatives.

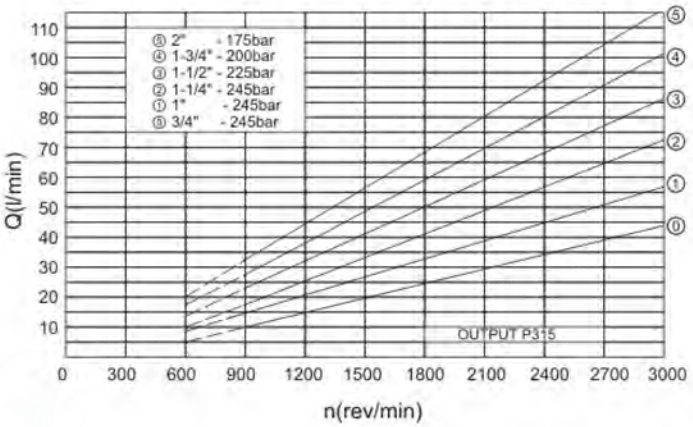

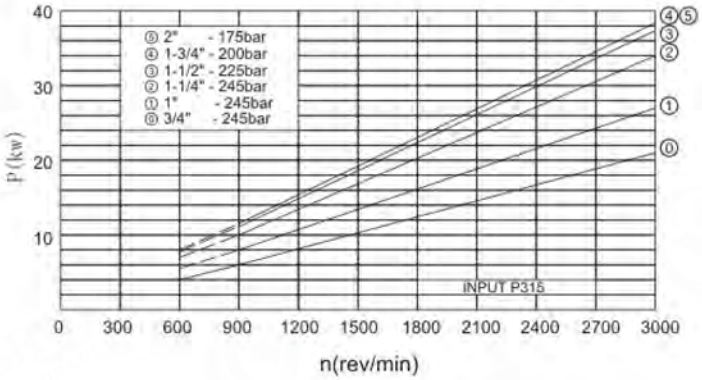

315 Series Coding

REPEAT FOR TANDEM UNITS

1 315 2 3 4 5 6 7 8 9 6 7 10

1 PUMP / MOTOR

P PUMP
M MOTOR

2 UNIT

A SINGLE UNIT
B TANDEM UNITS
C SINGLE OR TANDEM WITH A CONTINENTAL SHAFT

3 SHAFT END COVER

1 PUMP WITHOUT SHAFT BEARING CLOCKWISE ROTATION
2 PUMP WITHOUT SHAFT BEARING COUNTER CLOCKWISE ROTATION
4 PUMP WITH SHAFT BEARING CLOCKWISE ROTATION CODE 490 ONLY
5 PUMP WITH SHAFT BEARING COUNTER CLOCKWISE ROTATION CODE 590 ONLY
9 MOTOR WITHOUT SHAFT BEARING & 1/4" DRAIN PORT

4 SHAFT END COVER

90 31/51 PIGGY BACK MOUNT
93 76/31 PIGGY BACK MOUNT
95 S.A.E.2 BOLT "A" MOUNT
96 S.A.E. 2 BOLT "B" MOUNT type 2

5 PORT END COVER SIDE PORTED

UNPORTED

BI	NONE	NONE

NPT PORTS ONLY-SIDE PORT

CW	CCW	IN	OUT
AJ	JA	1 1/4"	1"
AK	KA	1 1/4"	3/4"
AL	LA	1"	1"
AM	MA	1"	3/4"
AR	RA	3/4"	3/4"

S.A.E.O RING

CW	CCW	IN	OUT
FB	BF	1 1/4"	1"
FC	CF	1 1/4"	7/8"
FG	GF	1 1/4"	3/4"
FJ	JF	1 1/4"	5/8"
FL	LF	1"	1"
FV	VF	1"	7/8"
FW	WF	1"	3/4".
FX	XF	1"	5/8'
FY	YF	7/8"	7/8"
FZ	ZF	7/8"	3/4"
BC	CB	7/8"	5/8"
BG	GB	7/8"	1/2"
BJ	JB	3/4"	3/4"
BL	LB	3/4"	5/8"
BN	NB	3/4"	1/2"
BV	VB	1 1/4"	NONE
BW	WB	1"	NONE
BX	XB	7/8"	NONE
BY	YB	3/4"	NONE
BZ	ZB	NONE	1"
PD	DP	NONE	7/8"
PE	EP	NONE	3/4"
PM	MP	NONE	5/8"
PN	NP	NONE	1/2"

MOTOR SIDE PORT

BI-ROTATION S.A.E O RING		
VN	1"	1"
VR	3/4"	3/4"
VQ	1/2"	1/2"

REAR PORTED-S.A.E.O RING

CW	CCW	IN	OUT
UC	CU	1 1/4"	1"
UF	FU	1 1/4"	7/8"
UN	NU	1 1/4"	3/4"
UD	DU	1"	1"
UP	PU	1"	7/8"
UQ	QU	1"	3/4"
UR	RU	1"	5/8"
LN	NL	7/8"	7/8"
LP	PL	7/8"	3/4"
LQ	QL	7/8"	5/8"
LR	RL	3/4"	3/4"
LS	SL	3/4"	5/8"
LT	TL	3/4"	1/2"

MOTOR REAR PORT

BI-ROTATION S.A.E O RING		
RN	1"	1"
RQ	3/4"	3/4"
RS	1/2"	1/2"

MOTOR REAR PORT

BI-ROTATION NPT		
RN	1"	1"
RQ	3/4"	3/4"
RS	1/2"	1/2"

6 GEAR HOUSING

IN	OUT	CODE	
NONE	NONE	AB	PUMP
NONE	NONE	EB	MOTOR

7 GEAR SIZE

CODE	SIZE	Displacement		Max pressure	
		in.3/r	cm3/r	PSI	bar
03	3/8"	0.47	7.702	3500	245
05	1/2"	0.62	10.16	3500	245
06	5/8"	0.78	12.78	3500	245
07	3/4"	0.93	15.24	3500	245
08	7/8"	1.09	17.86	3500	245
10	1"	1.24	20.32	3500	245
11	1 1/8"	1.4	22.94	3500	245
12	1 1/4"	1.55	25.4	3500	245
13	1 3/8"	1.71	28.02	3500	245
15	1 1/2"	1.86	30.48	3300	225
16	1 5/8"	2.02	33.1	3100	215
17	1 3/4"	2.17	35.56	2900	200
18	1 7/8"	2.33	38.18	2700	190
20	2"	2.48	40.64	2500	170

8 SHAFT TYPE

97 S.A.E. "A" KEYED
96 S.A.E. "A" SPLINE
66 S.A.E. "B" KEYED
65 S.A.E. "B" SPLINE

9 BEARING CARRIERS

DUAL OUTLET (PUMPS)

S.A.E SPLIT FLANGE

CW	CCW	IN	OUT	OUT
CA	AC	1 1/4"	3/4"	3/4"
DA	AD	1 1/4"	3/4"	1/2"
EA	AE	1 1/4"	1/2"	1/2"
FA	AF	1"	3/4"	3/4"
GA	AG	1"	3/4"	1/2"
HA	AH	1"	1/2"	1/2"

DUAL OUTLET (PUMPS)

S.A.E SPLIT FLANGE

CW	CCW	IN	OUT
CJ	JC	1 1/4"	1 1/4"
CL	LC	1 1/4"	1"
CM	MC	1 1/4"	3/4"
HB	BH	1 1/4"	1/2"
HC	CH	1"	1"
HF	FH	1"	3/4"
HL	LH	1"	1/2"
HM	MH	3/4"	3/4"
HN	NH	3/4"	1/2"

S.A.E O RING

CW	CCW	IN	OUT	OUT
JG	GJ	1 1/2"	1"	1"
KG	GK	1 1/2"	1"	7/8"
LG	GL	1 1/2"	7/8"	7/8"
MG	GM	1 1/2"	1"	3/4"
NG	GN	1 1/2"	3/4"	3/4"
PG	GP	1 1/4"	1"	1"
QG	GQ	1 1/4"	1"	7/8"
RG	GR	1 1/4"	7/8"	7/8"
SG	GS	1 1/4"	1"	3/4"
TG	GT	1 1/4"	3/4"	3/4"
UG	GU	1 1/4"	3/4"	5/8"
VG	GV	1 1/4"	3/4"	1/2"
WG	GW	1 1/4"	5/8"	5/8"
XG	GX	1 1/4"	1/2"	1/2"
YG	GY	1"	1"	1"
ZG	GZ	1"	1"	7/8"
RC	CR	1"	7/8"	7/8"
SC	CS	1"	1"	3/4"
TC	CT	1"	3/4"	3/4"
VC	CV	1"	3/4"	5/8" .
WC	CW	1"	3/4"	1/2"
XC	CX	1"	5/8"	5/8"
YC	CY	1"	1/2"	1/2"

S.A.E O RING

CW	CCW	IN	OUT
KB	BK	1 1/2"	1 1/2"
KC	CK	1 1/2"	1 1/4"
KF	FK	1 1/2"	1"
KL	LK	1 1/2"	7/8"
KM	MK	1 1/2"	3/4"
KN	NK	1 1/4"	1 1/4"
KO	OK	1 1/4"	1"
KP	PK	1 1/4"	7/8"
KQ	QK	1 1/4"	3/4"
MB	BM	1 1/4"	5/8"
ML	LM	1 1/4"	1/2"
MN	NM	1"	1"
MQ	QM	1"	7/8"
MR	RM	1"	3/4"
MS	SM	1"	5/8"
MT	TM	1"	1/2"
MU	UM	3/4"	3/4"
MV	VM	3/4"	5/8"
MW	WM	3/4"	1/2"

10 CONNECTING SHAFT USE CODE #1 FOR ALL MULTIPLE UNITS

330 Series Gear Pump & Motor

◇Heavy duty, cast iron, external gear pump .
◇Standardization, universalization , serialization design .
◇Displacement range :16.1m/r -64.6 ml/r ,
Max rated pressure : 245bar , Intermittent :275bar ,
Speed range :400-3000 RPM

PERFORMANCE

Bushing series pressure and displacement

CODE	05	06	07	10	12	15	17	20
Gear Width	1/2 "	5/8 "	3/4 "	1	1-1/4'	1-1/2"	1-3/4"	2"
Theoretical Displacement	0.99	1.23	1.48	1.97	2.46	2.96	3.45	3.94
	16.1	20.2	24.2	32.3	40.4	48.4	56.5	64.6
Max Pressure Continuous	3500	3500	3500	3500	3500	3500	3250	3000
	245	245	245	245	245	245	225	210
Max Pressure Intermittent	4000	4000	4000	4000	4000	3850	3500	3300
	275	275	275	275	275	265	245	225
Speed RPM	400-3000							

Flow : GPM/LPM Pressure : PSI/bar

P330 Pump Flow and Power data

Speed RPM	Gear Width Output (gpm/lpm) and Inches (HP/KW)							
	1/2"		3/4"		1"		1-1/4"	
	245 bar		245 bar		245 bar		245 bar	
	Flow	Power	Flow	Power	Flow	Power	Flow	Power
900	12	6	19	10	26	13	33	16
	3.2	9	5.1	13	7	17	8.8	21
1200	17	8	26	13	36	17	45	21
	4.5	11	7	17	9.5	23	12	28
1500	22	11	34	16	46	21	57	26
	5.8	14	8.9	21	12.1	28	15.2	35
1800	27	13	41	19	55	25	70	32
	7.1	17	10.8	26	14.7	34	18.4	43
2100	32	15	48	22	65	30	82	37
	8.4	20	12.7	30	17.2	40	21.6	50
2400	36	17	55	25	75	34	94	42
	9.6	23	14.7	34	19.8	45	24.8	57
3000	46	21	70	32	94	42	118	53
	12.2	28	18.5	43	24.9	57	31.2	71

Flow: GPM/LPM Power : HP/kW

P330 Pump Flow and Power data (continued)

Speed RPM	Gear Width Output (gpm/lpm) and Inches (HP/KW)					
	1-1/2"		1-3/4"		2"	
	225 bar		220 bar		175 bar	
	Flow	Power	Flow	Power	Flow	Power
900	40	19	47	21	54	22
	10.6	26	12.4	28	14.3	29
1200	55	25	64	28	73	29
	14.5	34	16.9	37	19.4	39
1500	69	32	81	34	93	36
	18.3	43	21.4	46	24.5	49
1800	84	38	98	41	112	44
	22.1	51	25.9	55	29.6	58
2100	98	44	115	48	131	51
	26	60	30.3	65	34.7	68
2400	113	51	132	55	151	58
	29.8	68	34.8	74	39.8	78
3000	142	64	166	69	190	73
	37.5	85	43.8	92	50.1	97

M330 Motor performance data.

Speed RPM	1"		1-1/4"		1-1/2"		1-3/4"		2"	
	3500PSI/245bar		3500PSI/245bar		3300PSI/225bar		2900PSI/200bar		2500PSI/175bar	
	Flow	Torque	Flow	Torque	Flow	Torque	Flow	Torque	Flow	Torque
900	38	114.1	47	143.5	55	172.9	63	188.1	72	200
	10.1	1010	12.3	1270	14.5	1530	16.7	1 665	19	1770
1200	49	113.6	59	142.9	70	172.3	81	187.6	92	198.9
	12.8	1 005	15.7	1265	18.6	1525	21.4	1660	24.3	1760
1500	59	113	72	141.8	85	171.2	99	186.4	112	197.7
	15.6	1000	19.1	1255	22.6.	1515	26.1	1650	29.6	1750
1800	69	112.4	85	141.2	101	170	116	185.3	132	196.6
	18.4	995	22.5	1250	26.6.	1 505	30.8	1 640	34.9	1740
2100	80	111.9	98	140.1	116	168.9	134	183.6	152	194.3
	21.1	990	25.9	1240	30.7	1495	35.4	1625	40.2	1720
2400	90	111.3	111	139.5	131	167.2	152	181.3	172	191.5
	23.9	985	29.3	1235	34.7	1480	40.1	1605	45.5	1695
3000	110	110.7	136	139	161	166.7	186	180.2	212	190.4
	29.2	980	35.9	1230	42.6	1475	49.3	1595	56	1685

Torque: In.-lbs. / Nm Flow: GPM/LPM

Dimensional Date

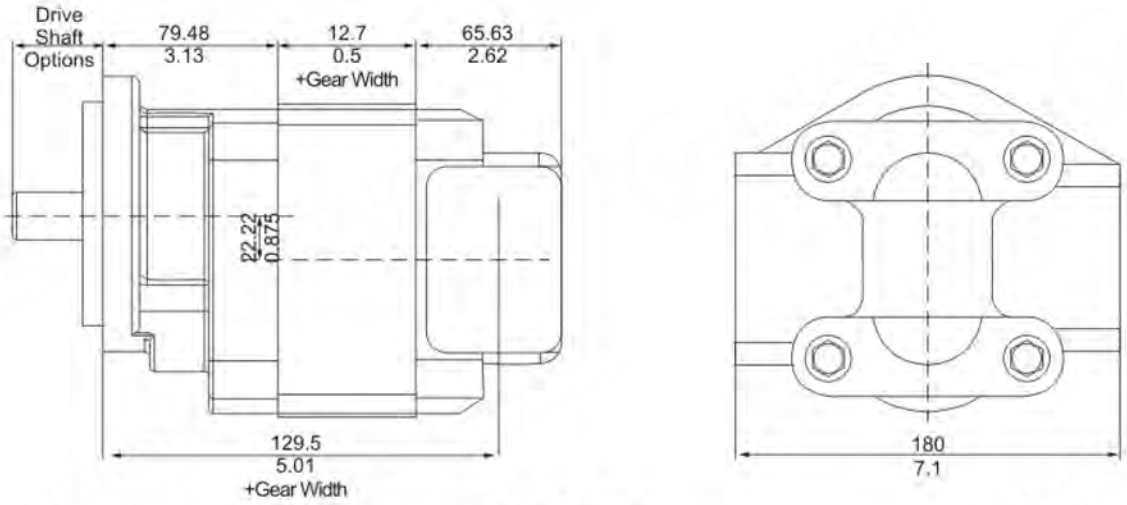

Single Unit

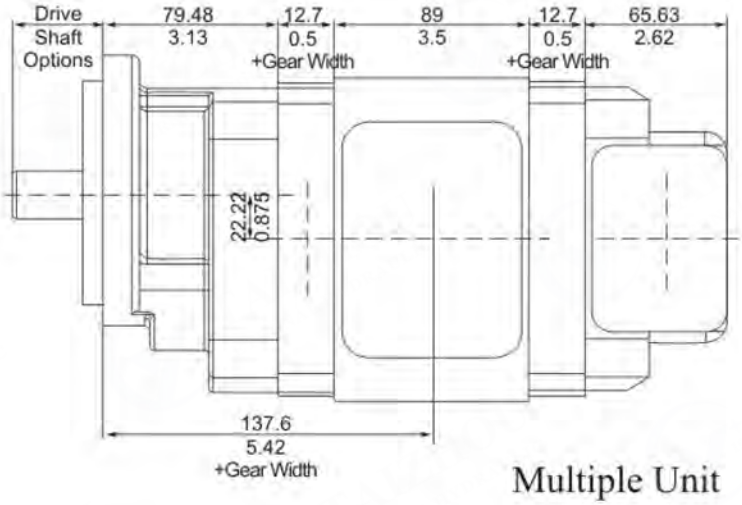

Multiple Unit

Performance data shown are the average results based on a series of laboratory tests of production units and are not necessarily representative of any one unit. Tests were run with the oil reservoir temperature at 120 F and viscosity 150 SSU at 100 F. Requests for more specific data should be directed to our Product Support Department through our sales representatives.

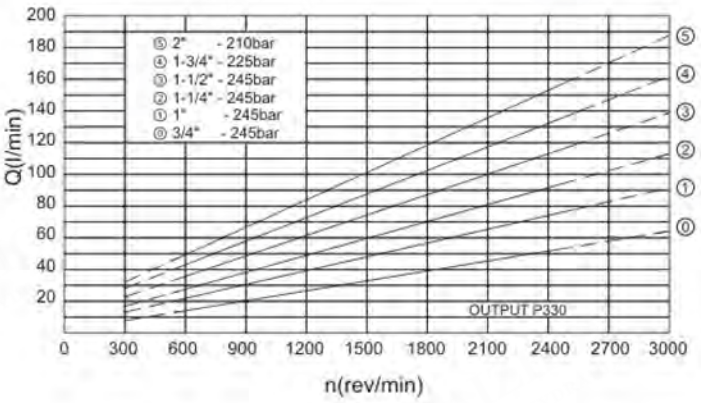

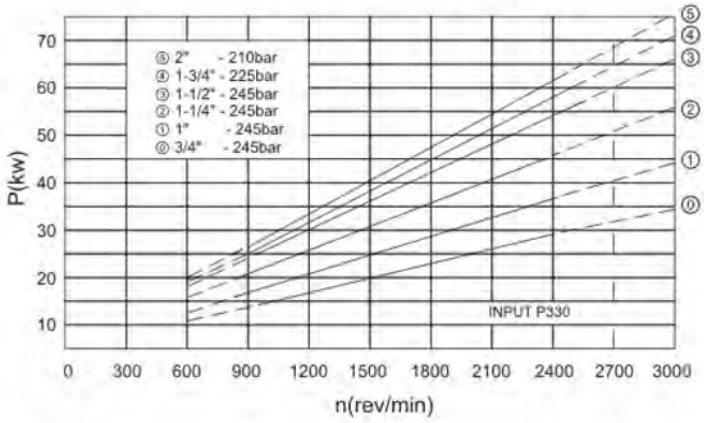

330 Series Coding

REPEAT FOR TANDEM UNITS

1	330	2	3	4	5	6	7	8	9	6	7	10

1 PUMP / MOTOR

P PUMP
M MOTOR

2 UNIT

A SINGLE UNIT
B TANDEM UNITS
C SINGLE OR TANDEM WITH A CONTINENTAL SHAFT

3 SHAFT END COVER

1 PUMP COMPLETE WITHOUT SHAFT BEARING CW
2 PUMP WITHOUT SHAFT BEARING CCW
4 PUMP COMPLETE WITH SHAFT BEARING CW
5 PUMP COMPLETE WITH SHAFT BEARING CCW
8 MOTOR BI-ROTATIONAL WITH SHAFT BEARING
9 MOTOR BI-ROTATIONAL WITHOUT SINGLE SHAFT BEARING

4 SHAFT END COVER

42 S.A.E. 4 BOLT "B" MOUNT
78 S.A.E. 4 BOLT "C" MOUNT
97 S.A.E. 2 BOLT "B" MOUNT

5 PORT END COVER SIDE PORTED

UNPORTED

BI	NONE	NONE

NPT PORTS ONLY-SIDE PORT

CW	CCW	IN	OUT
AJ	JA	1 1/4"	1"
AK	KA	1 1/4"	3/4"
AL	LA	1"	1"
AM	MA	1"	3/4"
AR	RA	3/4"	3/4"

MOTOR PORT END COVER

BI-ROTATION NPT

DN	1"	1"
DM	1 1/4"	1 1/4"
DQ	1 1/2"	1 1/2"

S.A.E.O RING

CW	CCW	IN	OUT
FJ	JF	1 1/4"	1"
FL	LF	1"	1"
BG	GB	1 1/4"	NONE
BJ	JB	1"	NONE
BN	NB	NONE	1"

MOTOR PORT END COVER

BI-ROTATION S.A.E COVER

VR	3/4"	3/4"
VN	1"	1"
VC	1 1/4"	1 1/4"

S.A.E. SPLIT FLANGE

CW	CCW	IN	OUT
EJ	JE	1 1/2"	1 1/4"
EK	KE	1 1/2"	1"
EL	LE	1 1/4"	1 1/4"
EM	ME	1 1/4"	1"
EN	NE	1"	1"
OF	FO	1 1/2"	NONE
OG	GO	1 1/4"	NONE
OJ	J0	1"	NONE
OM	MO	NONE	1 1/4"
ON	NO	NONE	1"

MOTOR SIDE PORT

BI–ROTATION S.A S.F.

CS	1 1/4"	1 1/4"
CT	1"	1"
CV	3/4"	3/4"

6 GEAR HOUSING

IN	OUT	CODE	
NONE	NONE	AB	PUMP
NONE	NONE	EB	MOTOR

7 GEAR SIZE

CODE	SIZE	Displacement		Max pressure	
		in.3/r	cm3/r	PSI	bar
05	1/2"	0.99	16.1	3500	245
06	5/8"	1.23	20.2	3500	245
07	3/4"	1.48	24.2	3500	245
10	1"	1.97	32.3	3500	245
12	1 1/4"	2.46	40.4	3500	245
15	1 1/2"	2.96	48.4	3500	245
17	1 3/4"	3.45	56.5	3250	225
20	2"	3.94	64.6	3000	210

8 SHAFT TYPE

7 S.A.E. "C" SPLINE CONTINTENTAL
25 S.A.E. "B" SPLINE
30 S.A.E. "B" KEYED
98 S.A.E. "BB" SPLINE
43 S.A.E. "BB" KEYED

9 BEARING CARRIERS

DUAL OUTLET (PUMPS)

S.A.E SPLIT FLANGE

CW	CCW	IN	OUT	OUT
AM	MA	2"	1 1/4"	1 1/4"
AN	NA	2"	1 1/4"	1"
AP	PA	2"	1"	1"
AT	TA	1 1/2"	1 1/4"	1 1/4"
AU	UA	1 1/2"	1 1/4"	1"
AV	VA	1 1/2"	1"	1"
AW	WA	1 1/4"	1 1/4"	1 1/4"
AX	XA	1 1/4"	1 1/4"	1"
AY	YA	1 1/4"	1"	1"
AZ	ZA	1"	1"	1"

S.A.E SPLIT FLANGE

CW	CCW	IN	OUT	OUT
GV	VG	1 1/2"	1"	1"
GY	YG	1 1/4"	1"	1"
GZ	ZG	1"	1"	1"

SINGLE OUTLET (**PUMPS**)

S.A.E SPLIT FLANGE

CW	CCW	IN	OUT
HB	BH	2"	1 1/2"
HC	CH	2"	1 1/4"
HF	FH	2"	1"
HL	LH	1 1/2"	1 1/2"
HM	MH	1 1/2"	1 1/4"
HN	NH	1 1/2"	1"
HO	OH	1 1/4"	1 1/4"
HP	PH	1 1/4"	1"
HQ	QH	1"	1"

S.A.E O RING

CW	CCW	IN	OUT
KM	MK	1 1/2"	1 1/4"
KN	NK	1 1/2"	1"
KO	OK	1 1/4"	1 1/4"
KP	PK	1 1/4"	1"
KQ	QK	1"	1"

COMBINED OUTLET

S.A.E SPLIT FLANGE(PUMPS)

CW	CCW	IN	OUT
UN	NU	2"	1 1/2"
UO	OU	2"	1 1/4"
UP	PU	1 1/2"	1 1/2"
UQ	QU	1 1/2"	1 1/4"
UR	RU	1 1/4"	1 1/4"

S.A.E SPLIT FLANGE(MOTORS)

BI-ROTATION	IN	OUT
BB	1 1/2"	1 1/2"
CC	1 1/4"	1 1/4"
EE	1"	1"
FF	3/4"	3/4"

S.A.E O RING (PUMPS)

PQ	QP	1 1/2"	1 1/4"
PR	RP	1 1/4"	1 1/4"

S.A.E O RING(MOTORS)

BI-ROTATION	IN	OUT
NN	1 1/4"	1 1/4"
QQ	1"	1"
RR	3/4"	3/4"

10 CONNECTING SHAFT USE CODE #1 FOR ALL MULTIPLE UNITS

Series Gear Pump & Motor

◇Heavy duty, cast iron, external gear pump .
◇Standardization, universalization , serialization design
◇Displacement range : 20.9m/r -104.5 ml/r ,
Max rated pressure : 245bar , Intermittent :275bar ,
Speed range :400-2400 RPM

PERFORMANCE

Bushing series pressure and displacement

CODE	05	07	10	12	15	17	20	22	25
Gear Width	1/2"	3/4 "	1"	1-1/4"	1-1/2"	1-3/4"	2"	2-1/4"	2-1/2"
Theoretical Displacement	1.28	1.91	2.55	3.19	3.83	4.46	5.1	5.74	6.38
	20.9	31.3	41.8	52.2	62.7	73.1	83.6	94	104.5
Max Pressure Continuous	3500	3500	3500	3500	3500	3250	3000	2750	2500
	245	245	245	245	245	224	207	190	172
Max Pressure Intermittent	4000	4000	4000	4000	3850	3500	3300	3000	2750
	275	275	275	275	265	245	225	210	190
Speed RPM	400-2400								

Flow : GPM/LPM Pressure : PSI/bar

P350 Pump Flow and Power data

Speed RPM	Gear Width Output (gpm/lpm) and Inches (HP/KW)									
	1/2"		3/4"		1"		1-1/4"		1-1/2"	
	245 bar		245 bar		245 bar		245 bar		245 bar	
	Flow	Power	Flow	Power	Flow	Power	Flow	Power	Flow	Power
900	15	8	24	12	33	17	42	21	52	25
	4	11	6.4	17	8.8	22	11.2	28	13.7	33
1200	21	11	33	17	46	22	58	28	71	33
	5.6	15	8.8	22	12.1	30	15.4	37	18.7	44
1500	28	14	43	21	59	28	74	34	89	41
	7.3	18	11.3	28	15.5	37	19.5	46	23.6	55
1800	34	17	52	25	71	33	89	41	108	50
	8.9	22	13.8	33	18.8	44	23.6	55	28.6	67
2100	40	19	62	29	84	39	105	48	127	58
	10.6	26	16.3	39	22.1	52	27.8	65	33.6	78
2400	46	22	71	33	96	44	121	55	146	66
	12.2	30	18.8	44	25.4	59	31.9	74	38.5	89

Flow: GPM/LPM Power : HP/kW

P350 Pump Flow and Power data (continued)

Speed RPM	Gear Width Output (gpm/lpm) and Inches (HP/KW)							
	1-3/4"		2"		2-1/4"		2-1/2"	
	225 bar		210 bar		190 bar		175 bar	
	Flow	Power	Flow	Power	Flow	Power	Flow	Power
900	61	27	70	28	79	29	89	30
	16.1	36	18.6	38	21	39	23.4	40
1200	83	36	95	38	108.	39	120	39
	21.9	48	25.2	51	28.4	52	31.7	53
1500	105	45	120	47	136	49	151	49
	27.7	60	31.8	63	35.9	65	40	66
1800	127	54	145	57	164	58	183	59
	33.5	72	38.4	76	43.3	78	48.3	79
2100	149	63	171	66	192	68	214	68
	39.3	84	45.1	89	50.8	91	56.6	91
2400	171	72	196	76	220	78	245	78
	45.1	96	51.7	101	58.2	105	64.8	105

M350 Motor performance data.

Speed RPM	1"		1-1/4"		1-1/2"		1-3/4"		2"		1-3/4"		2"	
	245 bar		245 bar		245 bar		225 bar		210 bar		190 bar		175 bar	
	Flow	Torque	Flow	Torque	Flow	Torque	Flow	Torque	Flow	Torque	Flow	Torque	Flow	Torque
900	51	149.1	61	188.7	70	228.8	80	251.4	90	265.5	100	274	110	276.8
	13.4	1320	16	1670	18.6	2025	21.2	2225	23.8	2350	26.4	2425	28.9	2450
1200	64	148.6	77	187.6	90	227.7	103	250.3	116	264.4	129	272.3	142	275.1
	16.9	1315	20.4	1660	23.8	2015	27.2	2215	30.6	2340	34	2410	37.4	2435
1500	77	146.9	93	185.3	110	224.8	126	248	142	261.6	158	269.5	174	272.3
	20.5	1300	24.7	1640	28.9	1990	33.2	2195	37.4	2315	41.7	2385	45.9	2410
1800	91	146.3	110	184.7	129	223.7	148	246.3	167	259.9	187	268.3	206	270.6
	24	1295	29	1635	34.1	1980	39.2	2180	44.2	2300	49.3	2375	54.4	2395
2100	104	145.2	126	183	149	222	171	244.6	193	258.2	216	266.1	238	268.9
	27.5	1285	33.4	1620	39.3	1965	45.2	2165	51.1	2285	57	2355	62.9	2380
2400	117	142.9	143	180.8	168	219.2	194	241.2	219	254.8	245	262.7	270	265.5
	31	1265	37.7	1600	44.4	1940	51.2	2135	57.9	2255	64.6	2325	71.3	2350

Torque: In.-lbs./Nm Flow: GPM/LPM

Dimensional Date

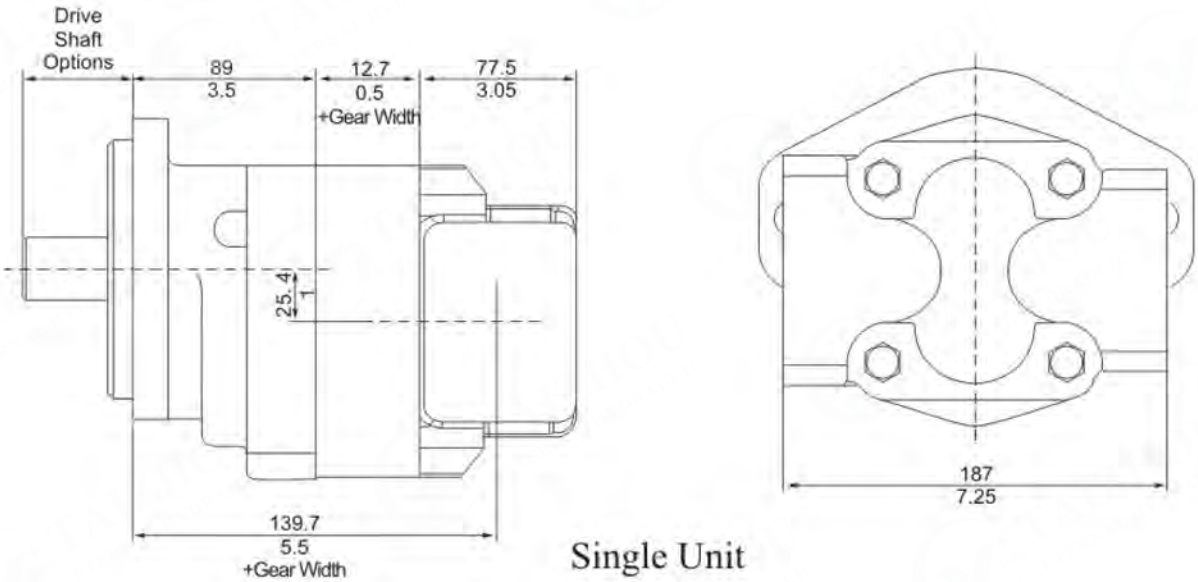

Single Unit

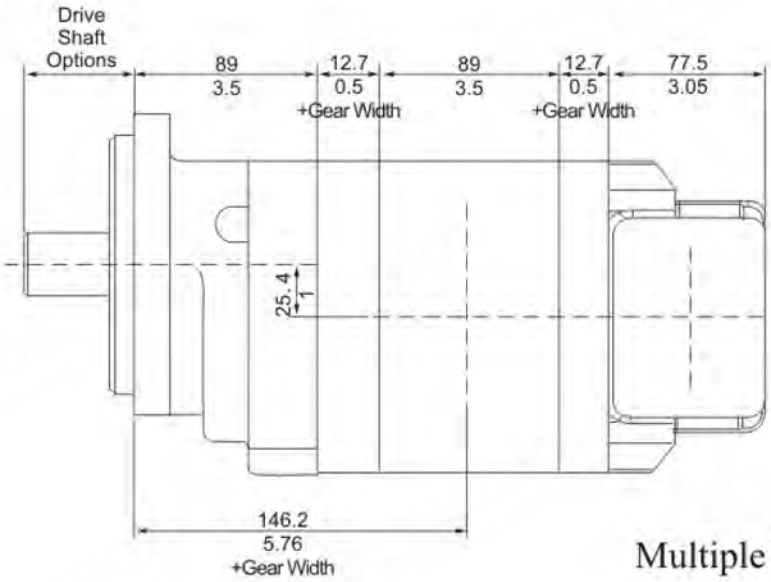

Multiple Unit

Performance data shown are the average results based on a series of laboratory tests of production units and are not necessarily representative of any one unit. Tests were run with the oil reservoir temperature at 120 F and viscosity 150 SSU at 100 F. Requests for more specific data should be directed to our Product Support Department through our sales representatives.

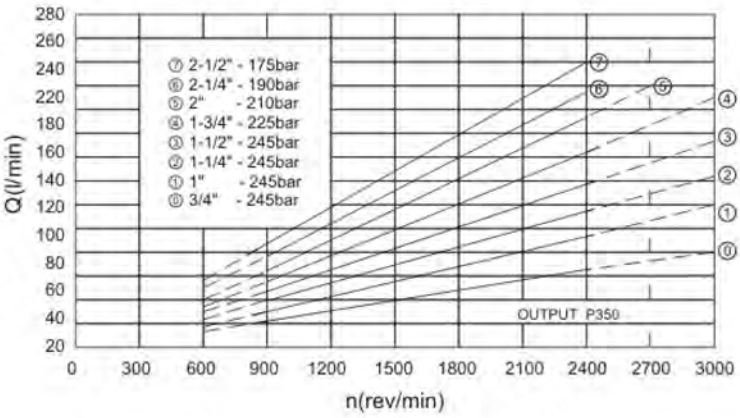

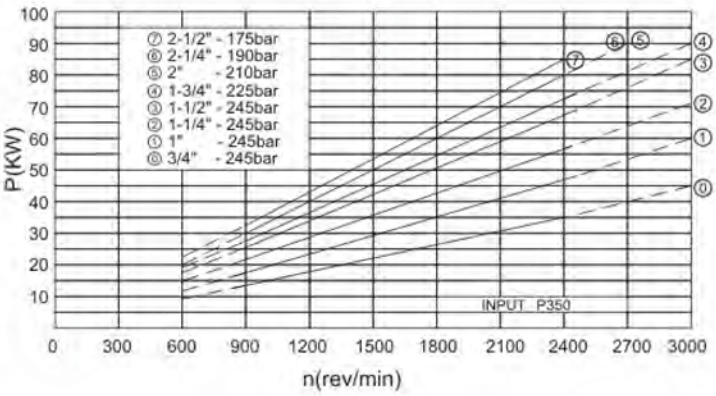

350 Series Coding

REPEAT FOR TANDEM UNITS

1	350	2	3	4	5	6	7	8	9	6	7	10

1 PUMP / MOTOR

P PUMP
M MOTOR

2 UNIT

A SINGLE UNIT
B TANDEM UNITS
C SINGLE OR TANDEM WITH A CONTINENTAL SHAFT

3 SHAFT END COVER

1 PUMP COMPLETE WITHOUT SHAFT BEARING CW
2 PUMP WITHOUT SHAFT BEARING CCW
4 PUMP COMPLETE WITH SHAFT BEARING CW
5 PUMP COMPLETE WITH SHAFT BEARING CCW
8 MOTOR BI-ROTATIONAL WITH SHAFT BEARING
9 MOTOR BI-ROTATIONAL WITHOUT SINGLE SHAFT BEARING

4 SHAFT END COVER

42 S.A.E. 4 BOLT "B" MOUNT
46 S.A.E. 4/2 BOLT "B" MOUNT
78 S.A.E. 4 BOLT "C" MOUNT
97 S.A.E. 2 BOLT "B" MOUNT
98 S.A.E. 2 BOLT "C" MOUNT

5 PORT END COVER SIDE PORTED

UNPORTED

BI	IB	NONE	NONE

S.A.E.O RING

CW	CCW	IN	OUT
FB	BF	1 1/2"	1 1/4"
FC	CF	1 1/2"	1"
FG	GF	1 1/4"	1 1/4"
FJ	JF	1 1/4"	1"
FL	LF	1"	1"
BC	CB	1 1/2"	NONE
BG	GB	1 1/4"	NONE
BJ	JB	1"	NONE
BL	LB	NONE	1 1/4"
BN	NB	NONE	1"

MOTOR SIDE PORT

BI-ROTATION S.A.E O RING

VC	1 1/4"	1 1/4"
VN	1"	1"
VR	3/4"	3/4"

SIDE PORTED

S.A.E. SPLIT FLANGE

CW	CCW	IN	OUT
EC	CE	2"	1 1/2"
EF	FE	2"	1 1/4"
EG	GE	2"	1"
EH	HE	1 1/2"	1 1/2"
EJ	JE	1 1/2"	1 1/4"
EK	KE	1 1/2"	1"
EL	LE	1 1/4"	1 1/4"
EM	ME	1 1/4"	1"
EN	NE	1"	1"
OE	EO	2"	NONE
OF	FO	1 1/2"	NONE
OG	GO	1 1/4"	NONE
OJ	JO	1"	NONE
OL	JO	NONE	1 1/2"
OM	MO	NONE	1 1/4"
ON	NO	NONE	1"

MOTOR SIDE PORT

BI–ROTATION S.A.E S.F

CR	1 1/2"	1 1/2"
CS	1 1/4"	1 1/4"
CT	1"	1"
CV	3/4"	3/4"

6 GEAR HOUSING

IN	OUT	CODE	
NONE	NONE	AB	PUMP
NONE	NONE	EB	MOTOR

7 GEAR SIZE

CODE	SIZE	Displacement		Max pressure	
		in.3/r	cm3/r	PSI	bar
05	1/2"	1.28	1.28	3500	245
07	3/4"	1.91	1.91	3500	245
10	1"	2.55	2.55	3500	245
12	1 1/4"	3.19	3.19	3500	245
15	1 1/2"	3.83	3.83	3500	245
17	1 3/4"	4.46	4.46	3250	224
20	2"	5.1	5.1	3000	210
22	2 1/4"	5.74	5.74	2750	190
25	2 1/2"	6.38	6.38	2500	175

8 SHAFT TYPE

07 S.A.E. "C" SPLINE.
11 S.A.E. "C" KEYED
25 S.A.E. "B" SPLINE
43 S.A.E. "BB" KEYED
73 S.A.E. "C" KEYED LONG
98 S.A.E. "BB" SPLINE

9 BEARING CARRIERS

DUAL OUTLET (PUMPS)

S.A.E SPLIT FLANGE

CW	CCW	IN	OUT	OUT
AF	FA	2 1/2"	1 1/4"	1 1/4"
AG	GA	2 1/2"	1 1/4"	1"
AH	HA	2 1/2"	1"	1"
AM	MA	2"	1 1/4"	1 1/4"
AN	NA	2"	1 1/4"	1"
AP	PA	2"	1"	1"
AT	TA	1 1/2"	1 1/4"	1 1/4"
AU	UA	1 1/2"	1 1/4"	1"
AV	VA	1 1/2"	1"	1"
AW	WA	1 1/4"	1 1/4"	1 1/4"
AX	XA	1 1/4"	1 1/4"	1"
AY	YA	1 1/4"	1"	1"
AZ	ZA	1"	1"	1"

S.A.E O RING

CW	CCW	IN	OUT	OUT
GM	MG	2"	1 1/4"	1 1/4"
GN	NG	2"	1 1/4"	1"
GP	PG	2"	1"	1"
GT	TG	1 1/2"	1 1/4"	1 1/4"
GU	UG	1 1/2"	1 1/4"	1"
GV	VG	1 1/2"	1"	1"
GW	WG	1 1/4"	1 1/4"	1 1/4"
GX	XG	1 1/4"	1 1/4"	1"
GY	YG	1 1/4"	1"	1"
GZ	ZG	1"	1"	1"

SINGLE OUTLET (**PUMPS**)

S.A.E SPLIT FLANGE

CW	CCW	IN	OUT
HB	BH	2"	1 1/2"
HC	CH	2"	1 1/4"
HF	FH	2"	1"
HL	LH	1 1/2"	1 1/2"
HM	MH	1 1/2"	1 1/4"
HN	NH	1 1/2"	1"
HO	OH	1 1/4"	1 1/4"
HP	PH	1 1/4"	1"
HQ	QH	1"	1"
RS	SR	1 1/4"	1"

SINGLE OUTLET (**PUMPS**)

S.A.E O RING

CW	CCW	IN	OUT
KB	BK	2"	1 1/2"
KC	CK	2"	1 1/4"
KF	FK	2"	1"
KL	LK	1 1/2"	1 1/2"
KM	MK	1 1/2"	1 1/4"
KN	NK	1 1/2"	1"
KO	OK	1 1/4"	1 1/4"
KP	PK	1 1/4"	1"
KQ	QK	1"	1"

COMBINED OUTLET

S.A.E SPLIT FLANGE(PUMPS)

CW	CCW	IN	OUT
UN	NU	2"	1 1/2"
UO	OU	2"	1 1/4"
UP	PU	1 1/2"	1 1/2"
UQ	QU	1 1/2"	1 1/4"
UR	RU	1 1/4"	1 1/4"

S.A.E SPLIT FLANGE(MOTORS)

BI-ROTATION	IN	OUT
AA	2"	2"
BB	1 1/2"	1 1/2"
CC	1 1/4"	1 1/4"
EE	1"	1"
FF	3/4"	3/4"

S.A.E O RING (PUMPS)

PE	EP	2"	1 1/2"
PM	MP	2"	1 1/4"
PN	NP	1 1/2"	1 1/2"
PQ	QP	1 1/2"	1 1/4"
PR	RP	1 1/4"	1 1/4"

S.A.E O RING(MOTORS)

BI-ROTATION	IN	OUT
MM	1 1/2"	1 1/2"
NN	1 1/4"	1 1/4"
QQ	1"	1"
RR	3/4"	3/4"

10 CONNECTING SHAFT USE CODE #1 FOR ALL MULTIPLE UNITS

365 Series Gear Pump & Motor

◇Heavy duty, cast iron, external gear pump .
◇Standardization, universalization , serialization design .
◇Displacement range : 44.3m/r -147.5 ml/r ,
Max rated pressure : 245bar , Intermittent :275bar ,
Speed range :400-2400 RPM

PERFORMANCE

Bushing series pressure and displacement

CODE	07	10	12	15	17	20	22	25
Gear Width	3/4 "	1"	1-1/4"	1-1/2"	1-3/4"	2"	2-1/4"	2-1/2"
Theoretical Displacement	2.7	3.6	4.5	5.4	6.3	7.2	8.1	9
	44.3	59	73.8	88.5	103.3	118	132.8	147.5
Max Pressure Continuous	3500	3500	3500	3500	3500	3500	3250	3000
	245	245	245	245	245	245	225	210
Max Pressure Intermittent	4000	4000	4000	4000	4000	3850	3500	3300
	275	275	275	265	275	265	245	225
Speed RPM	400-2400							

Flow : GPM/LPM Pressure : PSI/bar

P365 Pump Flow and Power data

Speed RPM	Gear Width Output (gpm/lpm) and Inches (HP/KW)							
	3/4"		1"		1-1/4"		1-1/2"	
	245 bar		245 bar		245 bar		245 bar	
	Flow	Power	Flow	Power	Flow	Power	Flow	Power
900	30	18	44	23	57	29	70	35
	8	24	11.5	31	14.9	39	18.4	47
1200	44	23	61	31	79	39	96	47
	11.5	31	16.2	42	20.8	52	25.5	63
1500	57	29	79	39	101	49	123	59
	15	39	20.9	52	26.6	66	32.5	79
1800	70	35	97	47	123	59	149	70
	18.5	47	25.6	63	32.5	79	39.5	94
2100	83	41	114	55	145	68	176	82
	22	55	30.2	73	38.3	92	46.5	110
2400	97	47	132	63	167	78	203	94
	25.6	63	34.9	84	44.2	105	53.5	126

Flow: GPM/LPM Power : HP/kW

P365 Pump Flow and Power data (continued)

Speed RPM	Gear Width Output (gpm/lpm) and Inches (HP/KW)							
	1-3/4"		2"		2-1/4"		2-1/2"	
	245 bar		245 bar		225 bar		210 bar	
	Flow	Power	Flow	Power	Flow	Power	Flow	Power
900	83	41	96	47	109	49	122	50
	21.8	55	25.4	63	28.8	66	32.3	67
1200	114	55	131	63	149	65	166	67
	30	73	34.7	84	39.3	88	44	90
1500	145	68	167	78	188	82	211	84
	38.2	92	44.1	105	49.8	110	55.6	112
1800	176	82	202	94	228	98	255	101
	46.4	110	53.4	126	60.3	131	67.3	135
2100	207	96	238	110	268	114	299	117
	54.6	128	62.8	147	70.8	153	79	157
2400	238	110	273	125	308	131	343	134
	62.8	147	72.1	168	81.4	175	90.7	180

M365 Motor performance data.

Speed RPM	1"		1-1/4"		1-1/2"		1-3/4"		2"		1-3/4"		2"	
	245 bar		245 bar		245 bar		225 bar		210 bar		190 bar		175 bar	
	Flow	Torque	Flow	Torque	Flow	Torque	Flow	Torque	Flow	Torque	Flow	Torque	Flow	Torque
900	70	210.7	83	266.1	97	323.1	111	380.8	124	435	138	454.2	152	466.1
	18.4	1865	22	2355	25.6	2860	29.2	3370	32.9	3850	36.5	4020	40.1	4125
1200	88	208.5	106	263.3	124	319.7	142	376.8	160	430.5	179	449.7	197	461
	23.3	1845	28.1	2330	32.9	2830	37.6	3335	42.4	381 0	47.2	3980	52	4080
1500	107	205.1	129	259.3	152	314. 1	1 74	370.6	197	423.7	219	442.3	242	454.2
	28.2	1815	34.1	2295	40.1	2780	46	3280	52	3750	57.9	3915	63.8	4020
1800	125	203.9	152	257.6	179	312.4	206	368.9	233	421.4	260	440.1	287	451. 4
	33.1	1 805	40.2	2280	47.3	2765	54.4	3265	61.5	3730	68.6	3895	75.7	3995
2100	144	198.3	175	250.8	206	303.9	238	357	269	407.9	300	426	332	436.7
	37.9	1755	46.2	2220	54.4	2690	62.8	3160	71.1	3610	79.3	3770	87.6	3865
2400	162	192.6	198	243.5	234	295.5	269	345.2	305	394.3	341	411.8	377	422.6
	42.8	1705	52.3	2155	61.7	2615	71. 2	3055	80.6	3490	90.1	3645	99.5	3740

Torque: In.-lbs./Nm Flow: GPM/LPM

Dimensional Date

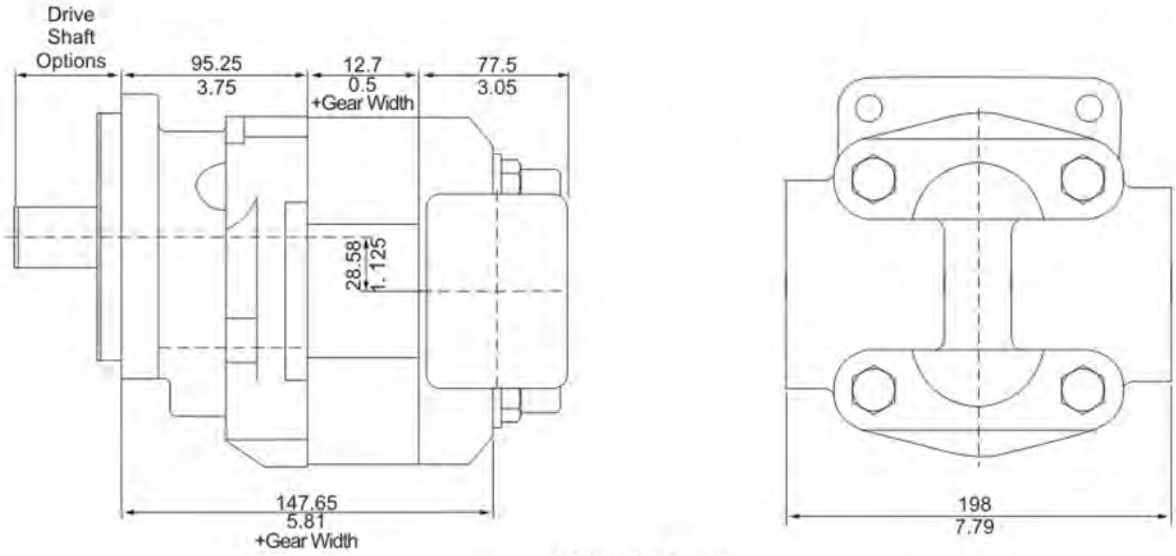

Single Unit

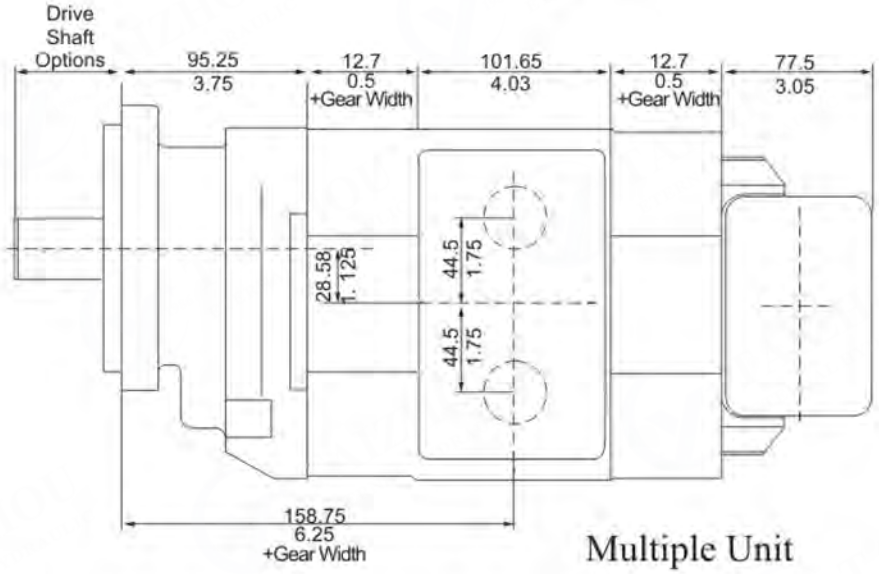

Multiple Unit

Performance data shown are the average results based on a series of laboratory tests of production units and are not necessarily representative of any one unit. Tests were run with the oil reservoir temperature at 120 F and viscosity 150 SSU at 100 F. Requests for more specific data should be directed to our Product Support Department through our sales representatives.

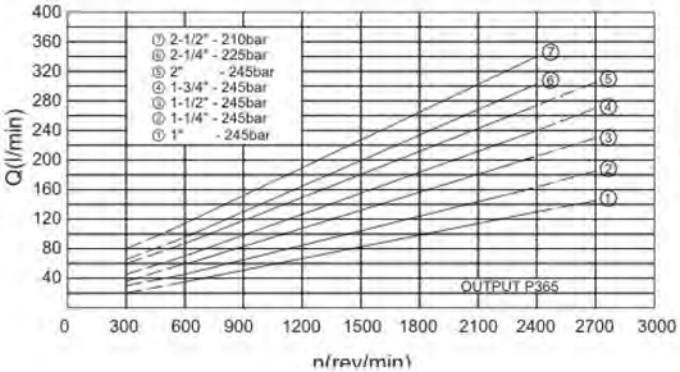

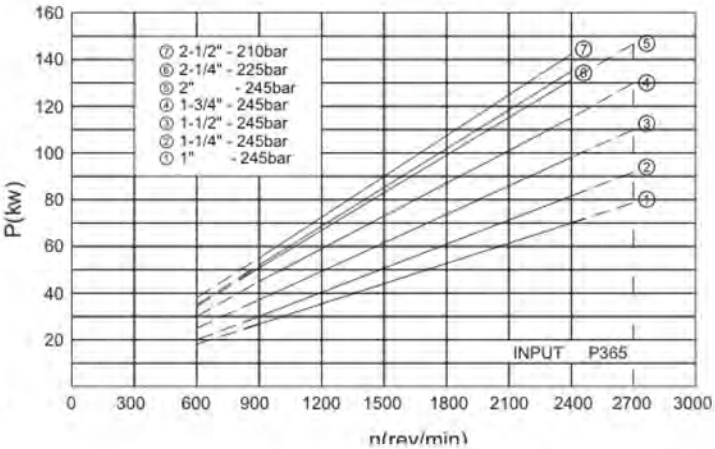

365 Series Coding

REPEAT FOR TANDEM UNITS

1	365	2	3	4	5	6	7	8	9	6	7	10

1 PUMP / MOTOR

P PUMP
M MOTOR

2 UNIT

A SINGLE UNIT
B TANDEM UNITS
C SINGLE OR TANDEM WITH A CONTINENTAL SHAFT

3 SHAFT END COVER

1 PUMP COMPLETE WITHOUT SHAFT BEARING CW
2 PUMP WITHOUT SHAFT BEARING CCW
4 PUMP COMPLETE WITH SHAFT BEARING CW
5 PUMP COMPLETE WITH SHAFT BEARING CCW
8 MOTOR BI-ROTATIONAL WITH SHAFT BEARING
9 MOTOR BI-ROTATIONAL WITHOUT SINGLE SHAFT BEARING

4 SHAFT END COVER

42 S.A.E. 4 BOLT "B" MOUNT
78 S.A.E. 4 BOLT "C" MOUNT
97 S.A.E. 2 BOLT "B" MOUNT
98 S.A.E. 2 BOLT "C" MOUNT

5 PORT END COVER SIDE PORTED

UNPORTED

BI	IB	NONE	NONE

S.A.E.O RING

CW	CCW	IN	OUT
FB	BF	1 1/2"	1 1/4"
FC	CF	1 1/2"	1"
FG	GF	1 1/4"	1 1/4"
FJ	JF	1 1/4"	1"
FL	LF	1"	1"
BC	CB	1 1/2"	NONE
BG	GB	1 1/4"	NONE
BJ	JB	1"	NONE
BL	LB	NONE	1 1/4"
BN	NB	NONE	1"

MOTOR SIDE PORT

BI-ROTATION S.A.E O RING

VC	1 1/4"	1 1/4"
VN	1"	1"
VR	3/4"	3/4"

SIDE PORTED

S.A.E. SPLIT FLANGE

CW	CCW	IN	OUT
EC	CE	2"	1 1/2"
EF	FE	2"	1 1/4"
EG	GE	2"	1"
EH	HE	1 1/2"	1 1/2"
EJ	JE	1 1/2"	1 1/4"
EK	KE	1 1/2"	1"
EL	LE	1 1/4"	1 1/4"
EM	ME	1 1/4"	1"
EN	NE	1"	1"
OE	EO	2"	NONE
OF	FO	1 1/2"	NONE
OG	GO	1 1/4"	NONE
OJ	JO	1"	NONE
OL	LO	NONE	1 1/2"
OM	MO	NONE	1 1/4"
ON	NO	NONE	1"

MOTOR SIDE PORT

BI-ROTATION S.A.E S.F

CR	1 1/2"	1 1/2"
CS	1 1/4"	1 1/4"
CT	1"	1"
CV	3/4"	3/4"

6 GEAR HOUSING

IN	OUT	CODE	
NONE	NONE	AB	PUMP
NONE	NONE	EB	MOTOR

7 GEAR SIZE

CODE	SIZE	Displacement		Max pressure	
		in.3/r	cm3/r	PSI	bar
07	3/4"	2.7	44.3	3500	245
10	1"	3.6	59	3500	245
12	1 1/4"	4.5	73.8	3500	245
15	1 1/2"	5.4	88.5	3500	245
17	1 3/4"	6.3	103.3	3500	245
20	2"	7.2	118	3500	245
22	2 1/4"	8.1	132.8	3250	224
25	2 1/2"	9	147.5	3000	210

8 SHAFT TYPE

07 S.A.E. "C" SPLINE.
11 S.A.E. "C" KEYED

9 BEARING CARRIERS

DUAL OUTLET (PUMPS)

S.A.E SPLIT FLANGE

CW	CCW	IN	OUT	OUT
AC	CA	2 1/2"	1 1/2"	1 1/2"
AD	DA	2 1/2"	1 1/2"	1 1/4"
AE	EA	2 1/2"	1 1/2"	1"
AF	FA	2 1/2"	1 1/4"	1 1/4"
AG	GA	2 1/2"	1 1/4"	1"
AH	HA	2 1/2"	1"	1"
AM	MA	2"	1 1/4"	1 1/4"
AN	NA	2"	1 1/4"	1"
AP	PA	2"	1"	1"
AT	TA	1 1/2"	1 1/4"	1 1/4"
AU	UA	1 1/2"	1 1/4"	1"
AV	VA	1 1/2"	1"	1"
AW	WA	1 1/4"	1 1/4"	1 1/4"
AX	XA	1 1/4"	1 1/4"	1"
AY	YA	1 1/4"	1"	1"
AZ	ZA	1"	1"	1"

S.A.E O RING

CW	CCW	IN	OUT	OUT
GJ	JG	2"	1 1/2"	1 1/2"
GK	KG	2"	1 1/2"	1 1/4"
GL	LG	2"	1 1/2"	1"
GM	MG	2"	1 1/4"	1 1/4"
GN	NG	2"	1 1/4"	1"
GP	PG	2"	1"	1"
GT	TG	1 1/2"	1 1/4"	1 1/4"
GU	UG	1 1/2"	1 1/4"	1"
GV	VG	1 1/2"	1"	1"
GW	WG	1 1/4"	1 1/4"	1 1/4"
GX	XG	1 1/4"	1 1/4"	1"
GY	YG	1 1/4"	1"	1"
GZ	ZG	1"	1"	1"

SINGLE OUTLET (**PUMPS**)

S.A.E SPLIT FLANGE

CW	CCW	IN	OUT
CJ	JC	2 1/2"	1 1/2"
CL	LC	2 1/2"	1 1/4"
CM	MC	2 1/2"	1"
HB	BH	2"	1 1/2"
HC	CH	2"	1 1/4"
HF	FH	2"	1"
HL	LH	1 1/2"	1 1/2"
HM	MH	1 1/2"	1 1/4"
HN	NH	1 1/2"	1"
HO	OH	1 1/4"	1 1/4"
HP	PH	1 1/4"	1"
HQ	QH	1"	1"

SINGLE OUTLET (**PUMPS**)

S.A.E O RING

CW	CCW	IN	OUT
KB	BK	2"	1 1/2"
KC	CK	2"	1 1/4"
KF	FK	2"	1"
KL	LK	1 1/2"	1 1/2"
KM	MK	1 1/2"	1 1/4"
KN	NK	1 1/2"	1"
KO	OK	1 1/4"	1 1/4"
KP	PK	1 1/4"	1"
KQ	QK	1"	1"

COMBINED OUTLET (**PUMPS**)

S.A.E SPLIT FLANGE(PUMPS)

CW	CCW	IN	OUT
UC	CU	2 1/2"	1 1/2"
UF	FU	2 1/2"	1 1/4"
UN	NU	2"	1 1/2"
UO	OU	2"	1 1/4"
UP	PU	1 1/2"	1 1/2"
UQ	QU	1 1/2"	1 1/4"
UR	RU	1 1/4"	1 1/4"

S.A.E SPLIT FLANGE(MOTORS)

BI-ROTATION	IN	OUT
AA	2"	2"
BB	1 1/2"	1 1/2"
CC	1 1/4"	1 1/4"
EE	1"	1"
FF	3/4"	3/4"

S.A.E O RING (PUMPS)

CW	CCW	IN	OUT
PE	EP	2"	1 1/2"
PM	MP	2"	1 1/4"
PN	NP	1 1/2"	1 1/2"
PQ	QP	1 1/2"	1 1/4"
PR	RP	1 1/4"	1 1/4"

S.A.E O RING(MOTORS)

BI-ROTATION	IN	OUT
MM	1 1/2"	1 1/2"
NN	1 1/4"	1 1/4"
QQ	1"	1"
RR	3/4"	3/4"

10 CONNECTING SHAFT USE CODE #1 FOR ALL MULTIPLE UNITS

PL Factor

Each section of a multiple pump or motor should be regarded as a single unit with corresponding delivery and power input requirements. Since the entire input horsepower is fed through a common drive shaft, the power delivered to or from the unit is limited by the physical strength of the shaft. This limit is defined as a "PL" factor; "P" being the operating pressure and "L" the summation of gear widths.

In multiple units the "PL" must be calculated for the first connecting shaft as well as the drive shaft. Each style or type of shaft has a unique "PL" factor as noted in the table below.

Pressure X Total Gear Width=PL

MODEL	SHAFT STYLE	SAE "A" Spline	SAE "A" Key	SAE "BB" Spline	SAE "BB" Key	SAE "B" Spline	SAE "B" Key	SAE "C" Spline	SAE "C" Key	Tandem
GW30/31	Integral	2600	—	12500	8600	8300	5050	—	—	—
	Two-Piece	2600	—	5800	5800	5800	5050	—	5800	5800
GW37	Two-Piece	—	—	7750	5550	5050	3700	11950	11950	11950
GW50/51	Integral	—	—	9900	6100	6400	5750	13000	11000	—
	Two-Piece	—	—	8000	6100	6400	5750	8000	8000	8000
GW75/76	Integral	—	—	7750	5550	5050	3700	8600	8300	—
	Two-Piece	—	—	7750	5550	5050	3700	7750	7750	7750
GW315	Integral	4450	3600	—	—	13400	9900	—	—	—
	Two-Piece	—	—	—	—	—	—	—	—	5550
GW330	Integral	—	—	13000	9300	8450	6250	—	—	—
	Two-Piece	—	—	6250	6250	6250	6250	6250	6250	6250
GW350	Integral	—	—	9900	7100	6450	4750	19100	13900	—
	Two-Piece	—	—	9000	7100	6450	4750	9000	9000	9000
GW365	Integral	—	—	7750	5550	5050	3700	14900	10800	—
	Two-Piece	—	—	7750	5550	5050	3700	11950	10800	11950

DRIVE SHAFT DIMENSIONS

NO.96
SAE A ANSI 16-4

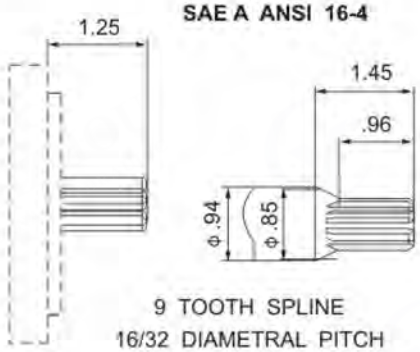

9 TOOTH SPLINE
16/32 DIAMETRAL PITCH
MAJOR DIA. .603-.609
MINOR DIA. .4835 MAX.

NO.25
SAE B ANSI 22-4

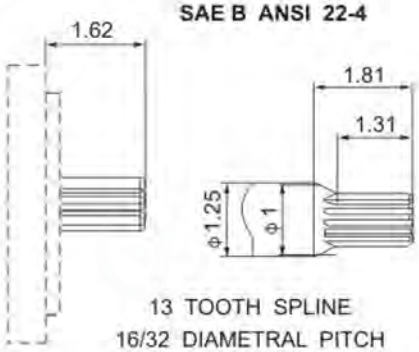

13 TOOTH SPLINE
16/32 DIAMETRAL PITCH
MAJOR DIA. .853-.858
MINOR DIA. .7335 MAX.

NO.65
SAE B ANSI 22-4

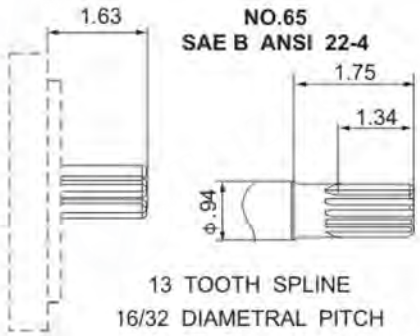

13 TOOTH SPLINE
16/32 DIAMETRAL PITCH
MAJOR DIA. .853-.858
MINOR DIA. .7335 MAX.

NO.07
SAE C ANSI 32-4

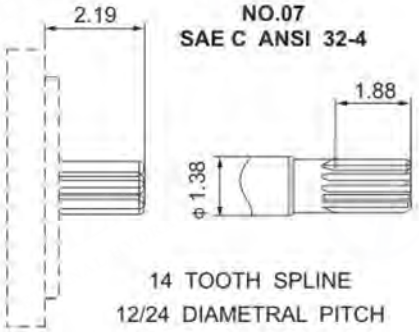

14 TOOTH SPLINE
12/24 DIAMETRAL PITCH
MAJOR DIA. 1.223-1.228
MINOR DIA. 1.0627 MAX.

NO.98
SAE BB ANSI 25-4

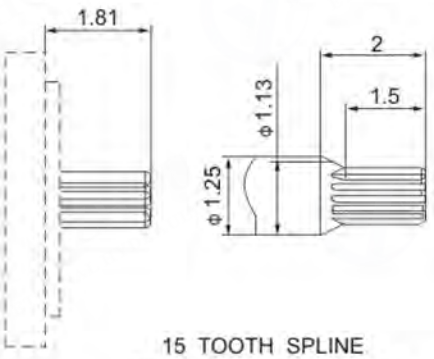

15 TOOTH SPLINE
16/32 DIAMETRAL PITCH
MAJOR DIA. .978 -.996
MINOR DIA. .840 MAX.
ANSI 16 -1

NO.97
SAE A ANSI 16-1

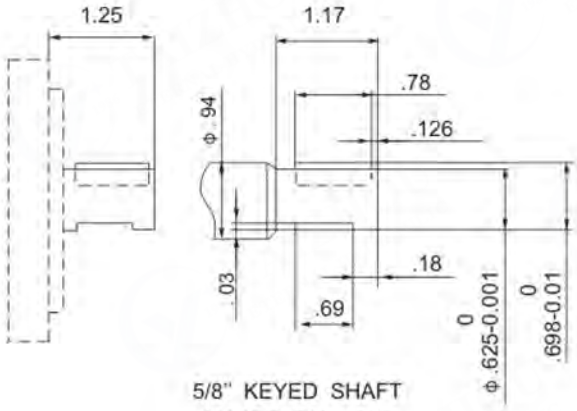

5/8" KEYED SHAFT
MAJOR DIA. .625
MINOR DIA. .624
SQUARE KEY .16 x .16 x .750

NO.30
SAE B ANSI 22-1

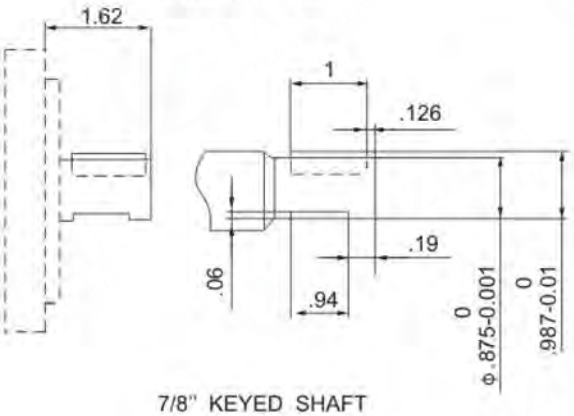

7/8" KEYED SHAFT
MAJOR DIA. .875
MINOR DIA. .874
15 P&W KEY .250 x .375 x 1

NO.66
SAE B ANSI 22-1

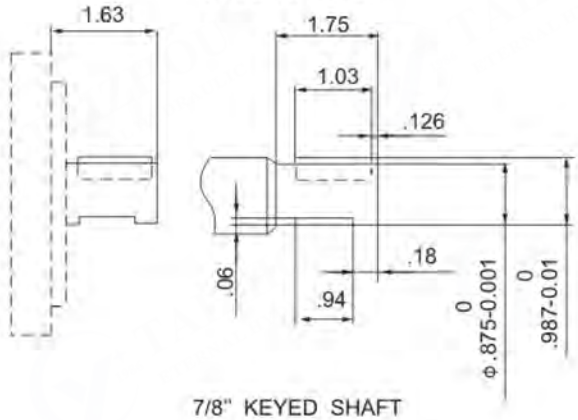

7/8" KEYED SHAFT
MAJOR DIA. .875
MINOR DIA. .874

NO.11
SAE C ANSI 32-1

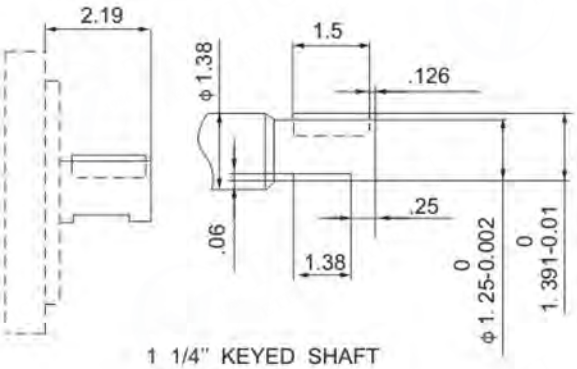

1 1/4" KEYED SHAFT
MAJOR DIA. 1.250
MINOR DIA. 1.248
25 P&W KEY .31 x .47 x 1.50

NO.43
SAE BB ANSI 25-1

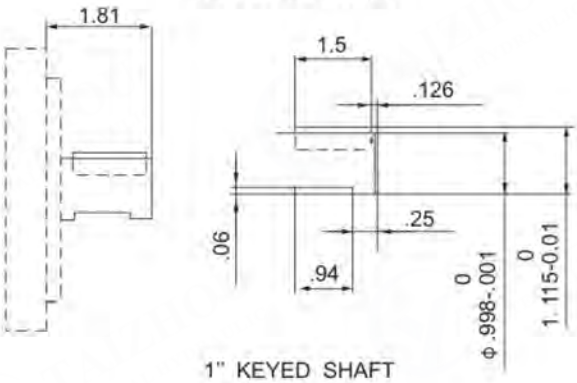

1" KEYED SHAFT
MAJOR DIA. .998
MINOR DIA. .997
21 P&W KEY .250 x .375 x 1.250

SHAFT END COVERS

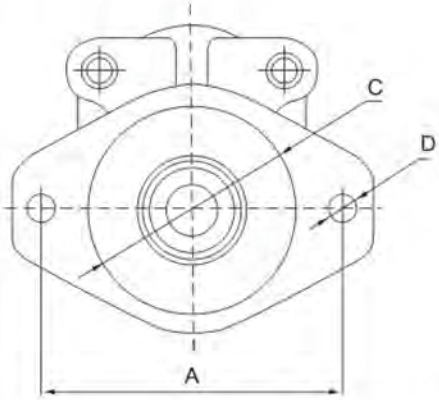

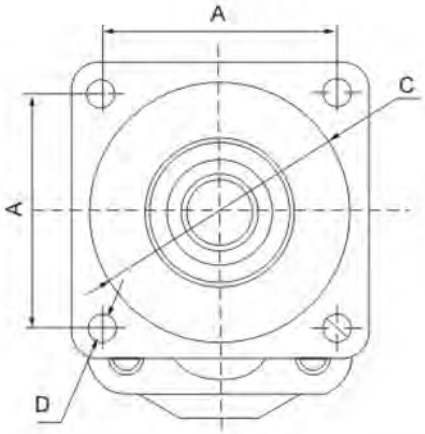

Shaft End Cover	A	C	D	Code	SERIES
2 Bolt "A" Mount	4.19	3.25	0.44	01	GW15
	4.19	3.25	0.44	94	GW20 GW30/31
	4.19	3.25	0.44	93	GW315
2 Bolt "B" Mount	5.75	4.00	0.56	07	GW15
	5.75	4.00	0.56	97	GW20 GW25 GW30/31 GW50/51 GW330 GW350 GW365
	5.75	4.00	0.56	96	GW315
2 Bolt "C" Mount	7.125	4.999	0.69	98	GW25 GW37 GW50/51 GW75/76 GW350 GW365
4 Bolt "B" Mount	3.536	3.999	0.56	12	GW15
	3.536	3.999	0.56	42	GW20 GW25 GW30/31 GW37 GW50/51 GW75/76 GW330 GW350 GW365
4 Bolt "C" Mount	4.508	4.999	0.56	78	GW25 GW30/31 GW37 GW50/51 GW75/76 GW330 GW350 GW365
4 Bolt "D" Mount	6.364	5.999	0.81	80	GW75/76

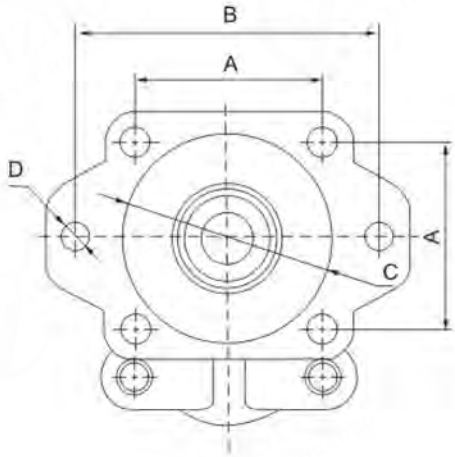

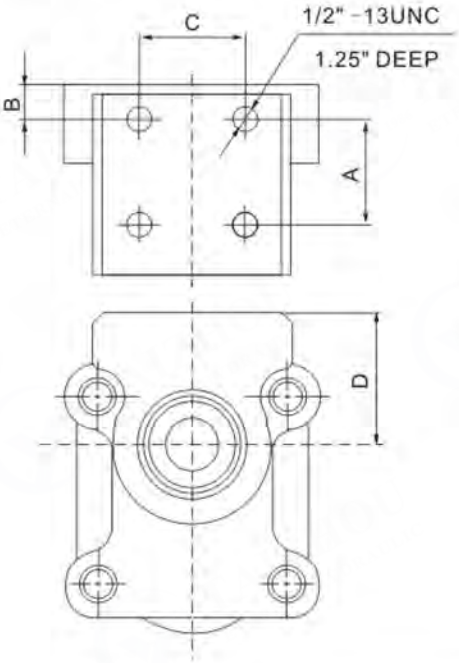

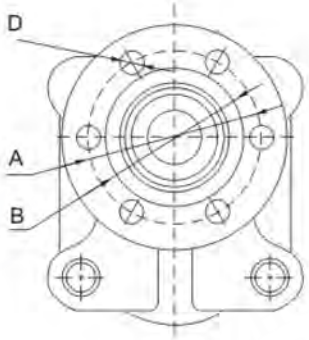

Shaft End Cover	A	B	C	D	Code	Series
2/4 Bolt B Mount	3.536	5.75	4.00	0.56	46	GW20 GW30/31 GW50/51 GW330 GW350
2/4 Bolt C Mount	4.508	7.125	5.00	0.56	N/A	GW50/51 GW350
Pad Mount	2.00	0.69	2.00	2.50	00	GW25 GW30/31 GW50/51
	2.50	0.875	3.50	2.50	00	GW37
6 Bolt Round	3.25	2.625		0.44	05	GW20 GW30/31
	4.00	3.148		.625	05	GW25

PORTING

THREAD PORTS

SIZE	NPT ANSI.BI.20	S.A.E. O RING ISO11926	BSPP ISO1179	METRIC STR.THD. SO6149-2
1/4"	1/4"-18	–	1/4"-19	–
3/8"	3/8"-18	–	3/8"-19	–
1/2"	1/2"-14	3/4"-16UNF	1/2"-14	M18x1.5
5/8"	–	7/8"-14UNF	–	M22x1.5
3/4"	3/4"-14	1-1/16"-12UN	3/4"-14	M26x1.5
7/8"	–	1-3/16"-12UN	–	M30x1.5
1"	1"-11.5	1-5/16"-12UN	1"-11	M33x2
1-1/4"	1-1/4"-11.5	1-5/8"-12UN	1-1/4"-11	M42x2
1-1/2"	1-1/2"-11.5	1-7/8"-12UN	1-1/2"-11	M48x2
2"	–	2-1/2"-12UN	2"-11	–
2-1/2	–	–	–	–
3"	–	–	–	–

S.A.E. SPLIT FLANGE

SIZE	A	B	C	C	D
1/2"	1.50	0.69	5/16"-18UNC	M8x1.25	0.59
3/4"	1.87	0.87	3/8"-16UNC	M10x1.5	0.71
1"	2.06	1.03	3/8"-16UNC	M10x1.5	0.71
1-1/4"	2.31	1.19	7/16"-14UNC	M10x1.5	0.87
1-1/2"	2.75	1.41	1/2"-13UNC	M12x1.75	1.02
2"	3.06	1.69	1/2"-13UNC	M12x1.75	1.02
2-1/2"	3.50	2.00	1/2"-13UNC	M12x1.75	1.02

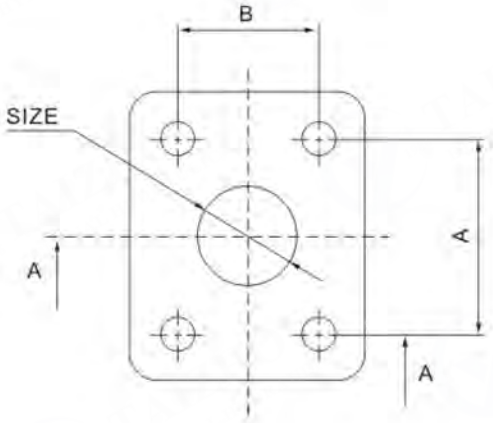

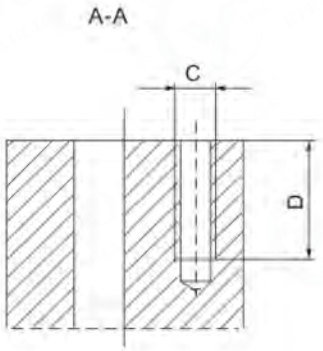

WEIGHTS
SINGLE UNIT APPROXIMATE WEIGHT

		Gear Width										
MODEL	Unit weight	1/2"	3/4"	1"	1 1/4"	1 1/2"	13/4"	2"	2 1/4"	2 1/2"	2 3/4"	3"
GW15	Pounds	24	25	26	27.5	29	30.5	32.5	*	*	*	*
GW20	Pounds	24	25	26	27.5	29	30.5	32.5	*	*	*	*
GW25	Pounds	36	39	42	43.5	45	46.5	48	50	52	*	*
GW30/31	Pounds	30	31	32	33	34	35	36	*	38.5	*	*
GW37	Pounds	52	54	56	58	60	62	65	68	71	*	78
GW50/51	Pounds	37	40	43	44.5	46	47.5	49	51	53.5	*	*
GW75/76	Pounds	67	70	72	74	76	79	82	85	88	*	92
GW 315	Pounds	16	17	18	19	20	21	22	*	*	*	*
GW330	Pounds	*	34.8	36	37.3	38.5	39.8	41	42.3	43.5	*	*
GW350	Pounds	*	49.5	51	52.5	54	55.5	57	58.5	60	*	*
GW365	Pounds	*	*	56	58.5	61	63.5	66	68.5	71	73.5	76
C101	Pounds	*	*	*	*	*	*	67	*	69	*	*
C102	Pounds	*	*	*	*	*	*	68	*	70	*	*
G101	Pounds	*	31	*	*	35	*	38	*	*	*	*
G102	Pounds	*	31	*	*	35	*	38	*	*	*	*

MULTIPLE UNIT APPROXIMATE WEIGHT

		Gear Width										
MODEL	Unit weight	1/2"	3/4"	1"	1 1/4"	1 1/2"	1 3/4"	2"	2 1/4"	2 1/2"	2 1/4"	3"
GW15	Pounds	21	22	23	24	25	26	28	*	*	*	*
GW20	Pounds	21	22	23	24	25	26	28	*	*	*	*
GW25	Pounds	28.5	30	31.5	33	34.5	36	37	41	44	*	*
GW30/31	Pounds	23	24	26	27	28	30	31	*	*	*	*
GW37	Pounds	43	45	47	50	53	56	59	62	65	*	68
GW50/51	Pounds	29.5	31	32.5	34	35.5	37	38	42	45	*	*
GW75/76	Pounds	54	57	60	63	65	67	69	71	73.5	*	76
GW315	Pounds	16	17	18	19	20	21	22	*	*	*	*
GW330	Pounds	*	31.3	32.5	33.8	35	36.3	37.5	38.8	40	*	*
GW350	Pounds	*	49.5	51	52.5	54	55.5	57	58.5	60	*	*
GW365	Pounds	*	*	56	58.5	61	63.5	66	68.5	71	73.5	76

For the total weight of a multiple unit add the weight from the column of the single unit and the multiple unit column.
(e.g. P15 single unit 3/4" gear width is 25 pounds plus P15 multiple unit 3/4" gear width is 22 pounds total weight is 47 pounds)
For total weight in kilograms divide total weight in pounds by 2.2 = weight in kilograms
(6.g. 47 pounds ÷ 2.2 = 21.36 kilograms)